chevrolet.com (U.S.)
chevrolet.gm.ca (Canada)
chevrolet.com.mx (Mexico)

2015

Camaro

2015 Chevrolet Camaro Owner Manual

In Brief 1-1
Instrument Panel 1-2
Initial Drive Information 1-4
Vehicle Features 1-12
Performance and Maintenance 1-17

Keys, Doors, and Windows 2-1
Keys and Locks 2-1
Doors 2-9
Vehicle Security 2-11
Exterior Mirrors 2-13
Interior Mirrors 2-14
Windows 2-15
Roof 2-17

Seats and Restraints 3-1
Head Restraints 3-2
Front Seats 3-3
Rear Seats 3-7
Safety Belts 3-8
Airbag System 3-15
Child Restraints 3-28

Storage 4-1
Storage Compartments 4-1
Additional Storage Features ... 4-3

Instruments and Controls 5-1
Controls 5-2
Warning Lights, Gauges, and Indicators 5-6
Information Displays 5-24
Vehicle Messages 5-32
Vehicle Personalization 5-42
Universal Remote System 5-48

Lighting 6-1
Exterior Lighting 6-1
Interior Lighting 6-5
Lighting Features 6-6

Infotainment System 7-1
Introduction 7-1
Radio 7-7
Audio Players 7-12
Phone 7-20

Climate Controls 8-1
Climate Control Systems 8-1
Air Vents 8-3
Maintenance 8-4

Driving and Operating 9-1
Driving Information 9-2
Starting and Operating 9-18
Engine Exhaust 9-27
Automatic Transmission 9-28
Manual Transmission 9-34
Brakes 9-36
Ride Control Systems 9-38
Cruise Control 9-45
Driver Assistance Systems ... 9-48
Fuel 9-51
Trailer Towing 9-55
Conversions and Add-Ons ... 9-61

Vehicle Care 10-1
General Information 10-3
Vehicle Checks 10-4
Headlamp Aiming 10-44
Bulb Replacement 10-44
Electrical System 10-48
Wheels and Tires 10-56

Jump Starting 10-96
Towing the Vehicle 10-99
Appearance Care 10-100

Service and Maintenance . . . 11-1
General Information 11-1
Maintenance Schedule 11-2
Special Application Services 11-8
Additional Maintenance and Care 11-9
Recommended Fluids, Lubricants, and Parts 11-12
Maintenance Records 11-16

Technical Data 12-1
Vehicle Identification 12-1
Vehicle Data 12-2

Customer Information 13-1
Customer Information 13-1
Reporting Safety Defects 13-12
Vehicle Data Recording and Privacy 13-14

OnStar 14-1
OnStar Overview 14-1
OnStar Services 14-3
OnStar Additional Information 14-6

Index i-1

The names, logos, emblems, slogans, vehicle model names, and vehicle body designs appearing in this manual including, but not limited to, GM, the GM logo, CHEVROLET, the CHEVROLET Emblem, CAMARO, Z/28, 1LE and ZL1, and the CAMARO Emblem are trademarks and/or service marks of General Motors LLC, its subsidiaries, affiliates, or licensors.

For vehicles first sold in Canada, substitute the name “General Motors of Canada Limited” for Chevrolet Motor Division wherever it appears in this manual.

This manual describes features that may or may not be on the vehicle because of optional equipment that was not purchased on the vehicle, model variants, country specifications, features/applications that may not be available in your region, or changes subsequent to the printing of this owner manual.

Refer to the purchase documentation relating to your specific vehicle to confirm the features.

Keep this manual in the vehicle for quick reference.

Canadian Vehicle Owners

Propriétaires Canadiens

A French language manual can be obtained from your dealer, at www.helminc.com, or from:

On peut obtenir un exemplaire de ce guide en français auprès du concessionnaire ou à l'adresse savant:

Helm, Incorporated
Attention: Customer Service
47911 Halyard Drive
Plymouth, MI 48170

Using this Manual

To quickly locate information about the vehicle, use the Index in the back of the manual. It is an alphabetical list of what is in the manual and the page number where it can be found.

Litho in U.S.A.
Part No. 23121192 A First Printing

©2014 General Motors LLC. All Rights Reserved.

Danger, Warnings, and Cautions

Warning messages found on vehicle labels and in this manual describe hazards and what to do to avoid or reduce them.

⚠ Danger
Danger indicates a hazard with a high level of risk which will result in serious injury or death.

⚠ Warning
Warning indicates a hazard that could result in injury or death.

⚠ Caution
Caution indicates a hazard that could result in property or vehicle damage.

A circle with a slash through it is a safety symbol which means “Do Not,” “Do not do this,” or “Do not let this happen.”

Symbols

The vehicle has components and labels that use symbols instead of text. Symbols are shown along with the text describing the operation or information relating to a specific component, control, message, gauge, or indicator.

: This symbol is shown when you need to see your owner manual for additional instructions or information.

: This symbol is shown when you need to see a service manual for additional instructions or information.

Vehicle Symbol Chart

Here are some additional symbols that may be found on the vehicle and what they mean. For more information on the symbol, refer to the Index.

: Airbag Readiness Light

: Air Conditioning

: Antilock Brake System (ABS)

: Audio Steering Wheel Controls or OnStar® (if equipped)

: Brake System Warning Light

: Charging System

: Cruise Control

: Engine Coolant Temperature

: Exterior Lamps

: Fog Lamps

: Fuel Gauge

: Fuses

: Headlamp High/Low-Beam Changer

: LATCH System Child Restraints

: Malfunction Indicator Lamp

: Oil Pressure

: Power

: Remote Vehicle Start

: Safety Belt Reminders

: Tire Pressure Monitor

: Traction Control/StabiliTrak®

: Windshield Washer Fluid

✍ NOTES

In Brief

Instrument Panel
Instrument Panel 1-2

Initial Drive Information
Initial Drive Information 1-4
Remote Keyless Entry (RKE) System 1-4
Remote Vehicle Start 1-4
Door Locks 1-5
Trunk Release 1-5
Windows 1-5
Seat Adjustment 1-6
Heated Seats 1-7
Head Restraint Adjustment 1-7
Safety Belts 1-7
Passenger Sensing System . . . 1-8
Mirror Adjustment 1-8
Steering Wheel Adjustment . . . 1-9
Interior Lighting 1-9
Exterior Lighting 1-9
Windshield Wiper/Washer 1-10
Climate Controls 1-11
Transmission 1-11

Vehicle Features
Infotainment System 1-12
Radio(s) 1-12
Satellite Radio 1-13
Portable Audio Devices 1-14
Bluetooth® 1-14
Steering Wheel Controls 1-14
Cruise Control 1-15
Driver Information Center (DIC) 1-15
Rear Vision Camera (RVC) 1-15
Parking Assist 1-16
Power Outlets 1-16
Universal Remote System . . . 1-16
Sunroof 1-16
Convertible 1-17

Performance and Maintenance
Traction Control/Electronic Stability Control 1-17
Tire Pressure Monitor 1-18
Engine Oil Life System 1-18
Car Wash Guidelines 1-19
Driving for Better Fuel Economy 1-19
Roadside Assistance Program 1-19
OnStar® 1-19

Instrument Panel

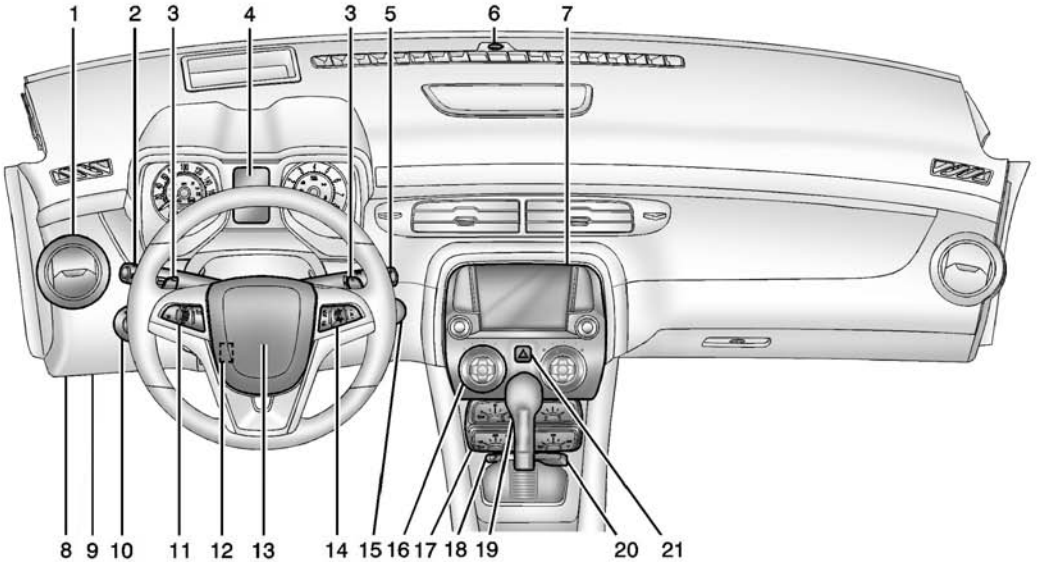

1. *Air Vents on page 8-3*.
2. Turn Signal Lever. See *Turn and Lane-Change Signals on page 6-4*.

   Headlamp High/Low-Beam Changer on page 6-2.

   Flash-to-Pass on page 6-2.

   Driver Information Center (DIC) Buttons. See *Driver Information Center (DIC) on page 5-24*.
3. Tap Shift (If Equipped). See *Manual Mode on page 9-31*.
4. *Instrument Cluster on page 5-7*.
5. *Windshield Wiper/Washer on page 5-3*.
6. Light Sensor. See *Automatic Headlamp System on page 6-3*.
7. *Infotainment on page 7-1*.
8. Hood Release (Out of View). See *Hood on page 10-5*.
9. Data Link Connector (DLC) (Out of View). See *Malfunction Indicator Lamp on page 5-16*.
10. *Exterior Lamp Controls on page 6-1*.

    Front Fog Lamps on page 6-5 (If Equipped).

    Instrument Panel Illumination Control on page 6-5.
11. *Cruise Control on page 9-45*.
12. *Steering Wheel Adjustment on page 5-2*.
13. *Horn on page 5-3*.
14. *Steering Wheel Controls on page 5-2*.
15. *Head-Up Display (HUD) on page 5-28* (If Equipped).
16. *Climate Control Systems on page 8-1*.
17. *Transmission Temperature Gauge (Except ZL1) on page 5-13* (If Equipped).

    Voltmeter Gauge on page 5-13 (If Equipped).

    Engine Oil Temperature Gauge on page 5-11 (If Equipped).

    Engine Oil Pressure Gauge on page 5-10 (If Equipped).
18. *Traction Control/Electronic Stability Control on page 9-38*.

    Performance Traction Management (PTM). See *Competitive Driving Mode on page 9-40* (ZL1 or Z/28 Models Only).
19. Shift Lever. See *Automatic Transmission on page 9-28* or *Manual Transmission on page 9-34*.
20. *Power Outlets on page 5-5*.
21. *Hazard Warning Flashers on page 6-4*.

Initial Drive Information

This section provides a brief overview about some of the important features that may or may not be on your specific vehicle.

For more detailed information, refer to each of the features which can be found later in this owner manual.

Remote Keyless Entry (RKE) System

The RKE transmitter may work up to 20 m (65 ft) away from the vehicle. If equipped with remote start, the engine may be started from up to 60 m (197 ft) away outside the vehicle.

With Remote Start Shown

Press the key release button to extend the key blade. The key can be used for the ignition and all locks.

Press to unlock the driver door or all doors.

Press to lock all doors.

Lock and unlock feedback can be personalized. See *Vehicle Personalization on page 5-42*.

Press and hold HOLD to open the trunk.

Press and release to initiate vehicle locator.

Press and hold for at least three seconds to sound the panic alarm.

Press again to cancel the panic alarm.

See *Keys on page 2-1* and *Remote Keyless Entry (RKE) System Operation on page 2-3*.

Remote Vehicle Start

If equipped, this feature allows the engine to be started from outside the vehicle.

Starting the Vehicle

1. Aim the RKE transmitter at the vehicle.
2. Press and release .
3. Immediately after completing Step 2, press and hold for at least four seconds or until the turn signal lamps flash.

When the engine starts, the parking lamps will turn on and remain on as long as the engine is running. The doors will be locked and the climate control system may come on.

The engine will continue to run for 10 minutes. Repeat the steps for a 10-minute time extension. Remote start can be extended only once.

Canceling a Remote Start

To cancel a remote start, do one of the following:

- Aim the RKE transmitter at the vehicle and press and hold until the parking lamps turn off.
- Turn on the hazard warning flashers.
- Turn the vehicle on and then off.

See *Remote Vehicle Start on page 2-5*.

Door Locks

To lock or unlock a door:

- To lock the door from the inside, use the door lock knob on the top of the door.
- To unlock the door from inside, pull the handle once. Pulling the handle again unlatches the door.
- From the outside turn the key clockwise or counterclockwise, or press or on the Remote Keyless Entry (RKE) transmitter. See *Door Locks on page 2-7* or *Remote Keyless Entry (RKE) System Operation on page 2-3*.

Power Door Locks

If equipped, there is a power door lock switch on the instrument panel and on the front door panels.

: Press to lock the doors.

: Press to unlock the doors.

See *Power Door Locks on page 2-7*.

Trunk Release

To open the trunk, press the trunk release button on the lower portion of the driver door, or press and hold HOLD on the Remote Keyless Entry (RKE) transmitter. See *Trunk on page 2-9*.

Windows

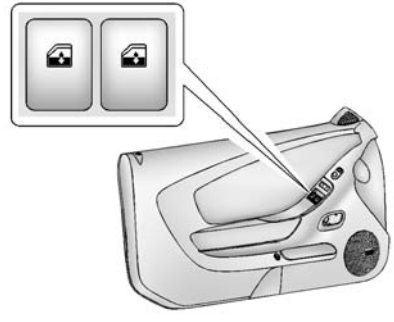

Coupe Shown, Convertible Similar

The power window switches on the driver door control all windows. The window switch on the passenger door is only for that window. Press the front of the switch down to open the window. Pull the switch up to close it. See *Windows on page 2-15*.

The switches work when the ignition is in ON/RUN or ACC/ ACCESSORY, or in Retained Accessory Power (RAP). See *Retained Accessory Power (RAP) on page 9-23*.

Seat Adjustment

Manual Seats

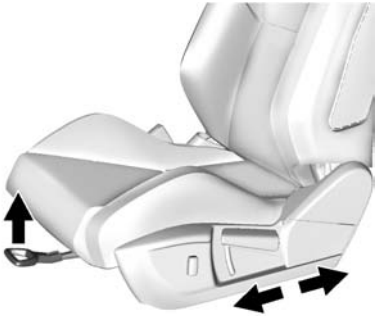

High Performance Seat Shown, Other Manual Seats Similar

To adjust the seat, if equipped:

1. Lift the handle under the seat to unlock it.
2. Slide the seat and release the handle.
3. Try to move the seat back and forth to be sure it is locked in place.

See *Seat Adjustment on page 3-3*.

Power Seats

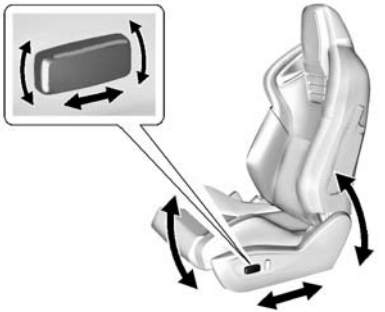

High Performance Seat Shown, Other Power Seats Similar

To adjust a power seat, if equipped:

- Move the seat forward or rearward by sliding the horizontal control forward or rearward.
- Raise or lower the front part of the seat cushion by moving the front of the horizontal control up or down.

- Raise or lower the entire seat by moving the entire horizontal control up or down.

See *Power Seat Adjustment on page 3-4*.

To raise or recline the seatback, tilt the vertical control forward or rearward. See *Reclining Seatbacks on page 3-4*.

Heated Seats

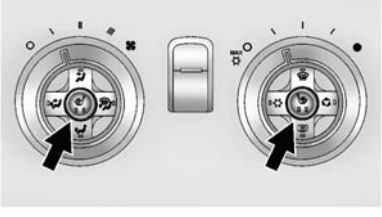

If available, press or to turn on the heated seat. A light indicates this feature is on.

To operate, the engine must be running.

Press the button once for the highest setting. With each press of the button, the heated seat will change to the next lower setting, and then the off setting. Two lights indicate the highest setting, and one light indicates the lowest.

See *Heated Front Seats on page 3-6*.

Head Restraint Adjustment

Do not drive until the head restraints for all occupants are installed and adjusted properly.

To achieve a comfortable seating position, change the seatback recline angle as little as necessary while keeping the seat and the head restraint height in the proper position.

If equipped with high performance seats, the front seat head restraints cannot be adjusted.

See *Head Restraints on page 3-2* and *Seat Adjustment on page 3-3*.

Safety Belts

Refer to the following sections for important information on how to use safety belts properly:

- *Safety Belts on page 3-8*.
- *How to Wear Safety Belts Properly on page 3-9*.
- *Lap-Shoulder Belt on page 3-10*.
- *Lower Anchors and Tethers for Children (LATCH System) on page 3-36*.

Passenger Sensing System

United States

Canada and Mexico

The passenger sensing system will turn off the front outboard passenger frontal airbag under certain conditions. No other airbag is affected by the passenger sensing system. See *Passenger Sensing System on page 3-22*.

The passenger airbag status indicator lights are visible on the overhead console when the vehicle is started. See *Passenger Airbag Status Indicator on page 5-15*.

Mirror Adjustment

Exterior

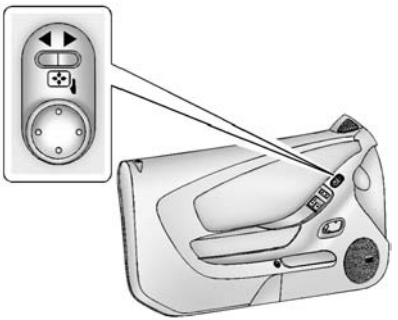

Coupe Shown, Convertible Similar

Outside power mirrors have controls on the driver door armrest.

To adjust each mirror:

1. Press the switch to select the driver or passenger side mirror.
2. Press one of the four sides on the (control pad) to adjust the mirror.
3. Adjust each outside mirror so that a little of the vehicle and the area behind it can be seen.

See *Power Mirrors on page 2-14*.

Interior

Adjust the inside rearview mirror for a clear view of the area behind your vehicle.

If equipped, push the tab forward for daytime use and pull it for nighttime use to avoid glare from the headlamps from behind.

If equipped, automatic dimming reduces the glare of the headlamps from behind. The dimming feature comes on when the vehicle is started.

Cleaning the Mirror

Do not spray glass cleaner directly on the mirror. Use a soft towel dampened with water.

Steering Wheel Adjustment

To adjust the steering wheel:

1. Pull the lever down.
2. Move the steering wheel up or down.
3. Pull or push the steering wheel closer or away from you.
4. Pull the lever up to lock the steering wheel in place.

Do not adjust the steering wheel while driving.

Interior Lighting

Dome Lamps

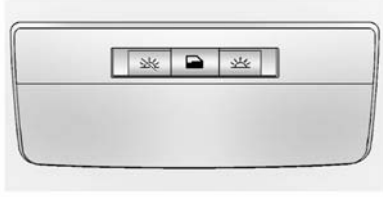

To change the settings, press the following:

: Turns the lamp off, even when a door is open.

: Turns the lamp on automatically when a door is opened.

: Turns the lamp on.

For more information on interior lighting, see *Instrument Panel Illumination Control on page 6-5*.

Exterior Lighting

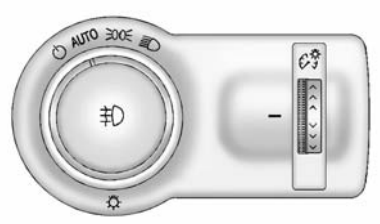

The exterior lamp control is on the instrument panel, on the outboard side of the steering wheel.

There are four positions:

: Briefly turn to this position to turn the automatic light control off or on again. When released, the control returns to the AUTO position.

AUTO: Automatically turns the exterior lamps on and off, depending on outside lighting.

: Turns on the parking lamps including all lamps, except the headlamps.

: Turns on the headlamps together with the parking lamps and instrument panel lights.

: Press to turn the fog lamps on or off. The fog lamps come on together with the parking lamps, taillamps, sidemarker lamps, license plate lamps, and instrument panel lights.

See:

- *Exterior Lamp Controls on page 6-1*.
- *Daytime Running Lamps (DRL) on page 6-2*.
- *Front Fog Lamps on page 6-5*.

Windshield Wiper/Washer

The windshield wiper/washer lever is on the right side of the steering column. With the ignition in ACC/ACCESSORY or ON/RUN, move the windshield wiper lever to select the wiper speed.

HI: Use for fast wipes.

LO: Use for slow wipes.

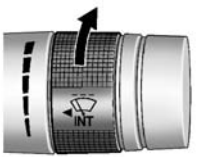

INT: Move the lever up to INT for intermittent wipes, then turn the INT band up for more frequent wipes or down for less frequent wipes.

OFF: Use to turn the wipers off.

: For a single wipe, briefly move the wiper lever down. For several wipes, hold the wiper lever down.

: Pull the windshield wiper lever toward you to spray windshield washer fluid and activate the wipers.

See *Windshield Wiper/Washer on page 5-3*.

Climate Controls

The heating, cooling, defrosting, and ventilation for the vehicle can be controlled with this system.

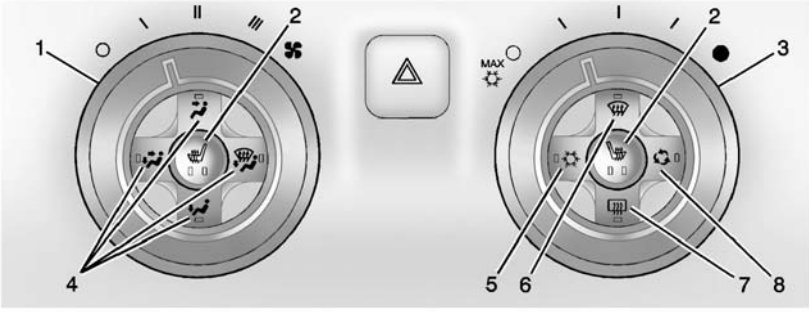

1. Fan Control
2. Heated Seats (If Equipped)
3. Temperature Control
4. Air Delivery Mode Controls
5. Air Conditioning (If Equipped)
6. Defrost
7. Rear Window Defogger
8. Recirculation

See *Climate Control Systems on page 8-1*.

Transmission

Automatic Transmission

Tap Shift

Tap Shift allows the driver to manually control the automatic transmission. To use Tap Shift, the shift lever must be in M (Manual Mode) or D (Drive). Vehicles with this feature have indicators on the steering wheel. The controls are on the back of the steering wheel. Tap the left control to downshift, and the right control to upshift. A Driver Information Center (DIC) message indicates the gear the vehicle is in.

Electronic Range Select (ERS) Mode

Vehicles with axle code GW8 have an ERS mode. ERS mode allows you to choose the top-gear limit of the transmission with fully automatic gear selection. This can help control the vehicle's speed while driving downhill or towing a trailer. The vehicle has an electronic shift position indicator within the

instrument cluster. When using the ERS mode a number will display next to the M, indicating the current maximum gear allowed.

To use this feature:

1. Move the shift lever to M (Manual Mode).
2. Press the plus/minus buttons on the back of the steering wheel, to increase or decrease the gear range available.

See *Manual Mode on page 9-31*.

Manual Transmission

One to Four Shift Message (V8 Only)

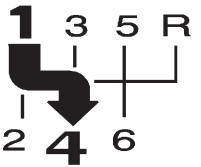

When this message comes on, you can only shift from 1 (First) to 4 (Fourth) instead of 1 (First) to 2 (Second). The message will be displayed in the Driver Information Center. See *Manual Transmission on page 9-34*.

Vehicle Features

Infotainment System

The base radio is included in this manual. See *Infotainment on page 7-1*. See the infotainment manual for information on the uplevel radio, audio players, phone, navigation system, and voice or speech recognition. There is also information on settings and downloadable applications (if equipped).

Radio(s)

VOL/ ⏻ : Press to turn the system on and off. Turn to increase or decrease the volume.

RADIO/BAND: Press to choose between FM, AM, or SiriusXM®, if equipped.

MENU/SELECT: Turn to select radio stations.

SEEK ⏮ : Press to seek the previous radio station or track.

SEEK ⏭: Press to seek the next radio station or track.

Buttons 1−6: Press to save and select favorite stations.

INFO: Press to show available information about the current station or track.

For more information about these and other radio features, see *Overview on page 7-2*.

Storing a Favorite Station

Stations from all bands can be stored in the favorite lists in any order. Up to six stations can be stored in each favorite page and the number of available favorite pages can be set.

To store the station to a position in the list, press the corresponding numeric button 1−6 until the station can be heard again.

For more information, see “Storing and Retrieving Favorites” in *AM-FM Radio on page 7-7*.

Setting the Clock

Adjusting the Time and Date

The clock menu can only be used with the radio on while in ON/RUN or ACC/ACCESSORY.

1. Press the CONFIG button.
2. Select Time and Date.
3. Select Set Time or Set Date.
4. Turn the MENU/SELECT knob to adjust the highlighted value.
5. Press the MENU/SELECT knob to select the next value.
6. To save the time or date and return to the Time and Date menu, press the ⇦ BACK button at any time or press the MENU/SELECT knob after adjusting the minutes or year.

Setting the 12/24 Hour Format

1. Press the CONFIG button.
2. Select Time and Date.
3. Highlight 12 hr / 24 hr Format.
4. Press the MENU/SELECT knob to select the 12 hour or 24 hour display format.

For detailed instructions on setting the clock, see *Clock on page 5-4*.

Satellite Radio

If equipped, vehicles with a SiriusXM® satellite radio tuner and a valid SiriusXM satellite radio subscription can receive SiriusXM programming.

SiriusXM Satellite Radio Service

SiriusXM is a satellite radio service based in the 48 contiguous United States and 10 Canadian provinces. SiriusXM satellite radio has a wide variety of programming and commercial-free music, coast to coast, and in digital-quality sound. A fee is required to receive the SiriusXM service.

Refer to:

- www.siriusxm.com or call 1-866-635-2349 (U.S.).
- www.xmradio.ca or call 1-877-209-0079 (Canada).

See *Satellite Radio on page 7-9*.

Portable Audio Devices

This vehicle may have a 3.5 mm (1/8 in) auxiliary input and a USB port in the center console bin. External devices such as iPods®, laptop computers, MP3 players, and USB drives may be connected, depending on the audio system.

See *Auxiliary Devices on page 7-14*.

Bluetooth®

The Bluetooth® system allows users with a Bluetooth-enabled mobile phone to make and receive hands-free calls using the vehicle audio system and controls.

The Bluetooth-enabled mobile phone must be paired with the in-vehicle Bluetooth system before it can be used in the vehicle. Not all phones will support all functions.

See *Bluetooth (Voice Recognition) on page 7-25* or *Bluetooth (Infotainment Controls) on page 7-21* or *Bluetooth (Overview) on page 7-20*.

Steering Wheel Controls

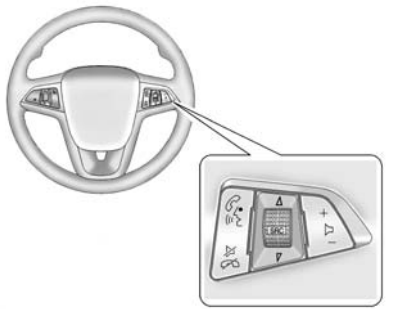

Some audio steering wheel controls can be adjusted at the steering wheel.

/ : Press to interact with the available Bluetooth or OnStar systems.

/ : Press to silence the vehicle speakers only. Press again to turn the sound on. If equipped with Bluetooth or OnStar, press to reject an incoming call, or end a current call.

SRC : Press to select an audio source.

Turn up or down to select the next or previous favorite radio station, CD, or MP3 track.

+ −: Press + to increase the volume; press − to decrease the volume.

See *Steering Wheel Controls on page 5-2*.

Cruise Control

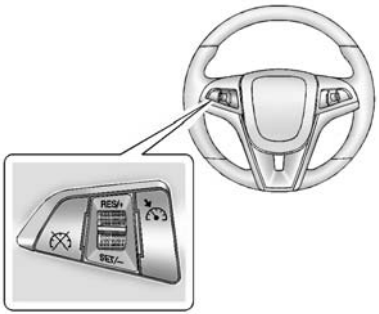

: Press to turn the system on and off. A white indicator appears in the instrument cluster when cruise is turned on.

: Press to disengage cruise control without erasing the set speed from memory.

RES/+: If there is a set speed in memory, press the thumbwheel up briefly to resume to that speed or hold upward to accelerate. If cruise control is already active, use to increase vehicle speed.

SET/−: Press the thumbwheel down briefly to set the speed and activate cruise control. If cruise control is already active, use to decrease speed.

See *Cruise Control on page 9-45*.

Driver Information Center (DIC)

The DIC display is in the center of the instrument cluster. It shows the status of many vehicle systems. The controls for the DIC are on the turn signal lever.

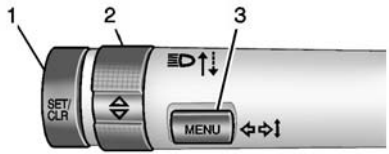

1. **SET/CLR:** Press to set, or press and hold to clear, the menu item displayed.
2. △ / ▽ **:** Use the band to scroll through the items in each menu.
3. **MENU:** Press to display the DIC menus. This button is also used to return to or exit the last screen displayed on the DIC.

See *Driver Information Center (DIC) on page 5-24*.

Rear Vision Camera (RVC)

If equipped, RVC displays a view of the area behind the vehicle, on the infotainment system display, when the vehicle is shifted into R (Reverse).

See *Rear Vision Camera (RVC) on page 9-49*.

Parking Assist

If equipped, this system uses sensors on the rear bumper to assist with parking and avoiding objects while in R (Reverse). It operates at speeds less than 8 km/h (5 mph). Rear Parking Assist (RPA) uses audible beeps to provide distance and system information.

Keep the sensors on the vehicle's rear bumper clean to ensure proper operation.

See *Parking Assist on page 9-48*.

Power Outlets

The vehicle has two accessory power outlets; one is below the climate control system and the other is inside the center console storage. They can be used to plug in electrical equipment, such as a cell phone or an MP3 player.

The accessory power outlets do not work when the key is removed from the ignition and the driver door is opened. This helps to preserve the battery life of the vehicle.

See *Power Outlets on page 5-5*.

Universal Remote System

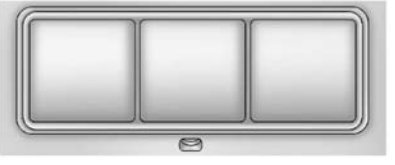

If equipped this system provides a way to replace up to three remote control transmitters used to activate devices such as garage door openers, security systems, and home automation devices.

Read the instructions completely before attempting to program the Universal Remote system. Because of the steps involved, it may be helpful to have another person available to assist you with programming the Universal Remote system.

See *Universal Remote System on page 5-48*.

Sunroof

The ignition must be in ON/RUN, ACC/ACCESSORY, or Retained Accessory Power (RAP) to operate the sunroof. See *Retained Accessory Power (RAP) on page 9-23*.

On vehicles with a sunroof, the switch is on the overhead console.

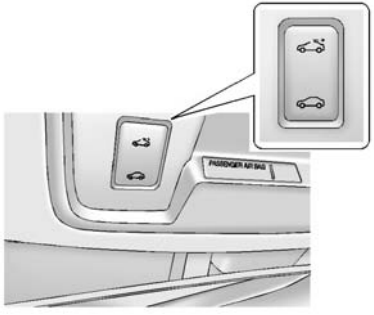

Open/Close: Press and hold the rear or front of the switch to open or close the sunroof.

Express-open: Press and release the rear of the switch two times to express-open the sunroof.

Vent: Press and release the rear of the switch to vent the sunroof.

See *Sunroof on page 2-17*.

Convertible

If equipped, the convertible top can be lowered and stowed under the tonneau cover behind the rear seat. For step-by-step instructions, see *Convertible Top on page 2-19*.

Performance and Maintenance

Traction Control/ Electronic Stability Control

The Traction Control System (TCS) limits wheel spin. The system turns on automatically every time the vehicle is started.

StabiliTrak assists with directional control of the vehicle in difficult driving conditions. The system turns on automatically every time the vehicle is started.

- To turn off traction control, press and release the TCS/StabiliTrak button OFF on the console in front of the shift lever. illuminates.
- Press the TCS/StabiliTrak button again to turn traction control back on.

- To turn off both traction control and electronic stability control, press and hold the TCS/StabiliTrak button on the console in front of the shift lever. and illuminate.
- Press the TCS/StabiliTrak button again to turn on both systems.

See *Traction Control/Electronic Stability Control on page 9-38*.

Tire Pressure Monitor

This vehicle may have a Tire Pressure Monitor System (TPMS).

The low tire pressure warning light alerts to a significant loss in pressure of one of the vehicle's tires. If the warning light comes on, stop as soon as possible and inflate the tires to the recommended pressure shown on the Tire and Loading Information label. See *Vehicle Load Limits on page 9-14*. The warning light will remain on until the tire pressure is corrected.

The low tire pressure warning light may come on in cool weather when the vehicle is first started, and then turn off as the vehicle is driven. This may be an early indicator that the tire pressures are getting low and the tires need to be inflated to the proper pressure.

The TPMS does not replace normal monthly tire maintenance. Maintain the correct tire pressures.

See *Tire Pressure Monitor System on page 10-67*.

Engine Oil Life System

The engine oil life system calculates engine oil life based on vehicle use and displays the CHANGE ENGINE OIL SOON message when it is time to change the engine oil and filter.

The oil life system should be reset to 100% only following an oil change.

Resetting the Oil Life System

1. Display the REMAINING OIL LIFE on the DIC. See *Driver Information Center (DIC) on page 5-24*.
2. Press and hold the SET/CLR button on the DIC while the Oil Life display is active. The oil life will change to 100%.

The oil life system can also be reset as follows:

1. Turn the ignition to ON/RUN with the engine off.
2. Fully press and release the accelerator pedal three times within five seconds.

See *Engine Oil Life System on page 10-19*.

Car Wash Guidelines

⚠ Caution

Some automatic car washes can cause damage to the vehicle, wheels, or convertible top, if equipped. Automatic car washes are not recommended, due to lack of clearance for the undercarriage and/or wide rear tires and wheels. See "Washing the Vehicle" under *Exterior Care on page 10-100*

Driving for Better Fuel Economy

Driving habits can affect fuel mileage. Here are some driving tips to get the best fuel economy possible.

- Avoid fast starts and accelerate smoothly.
- Brake gradually and avoid abrupt stops.
- Avoid idling the engine for long periods of time.
- When road and weather conditions are appropriate, use cruise control.
- Always follow posted speed limits or drive more slowly when conditions require.
- Keep vehicle tires properly inflated.
- Combine several trips into a single trip.
- Replace the vehicle's tires with the same TPC Spec number molded into the tire's sidewall near the size.
- Follow recommended scheduled maintenance.

Roadside Assistance Program

U.S.: 1-800-243-8872

TTY Users (U.S. Only): 1-888-889-2438

Canada: 1-800-268-6800

New Chevrolet owners are automatically enrolled in the Roadside Assistance Program.

See *Roadside Assistance Program on page 13-5*.

OnStar®

This vehicle may be equipped with a comprehensive, in-vehicle system that can connect to a live OnStar Advisor for Emergency, Security, Navigation, Connection, and Diagnostic Services. OnStar services may require a paid subscription. See *OnStar Overview on page 14-1*.

✍ NOTES

Keys, Doors, and Windows

Keys and Locks
Keys 2-1
Remote Keyless Entry (RKE) System 2-2
Remote Keyless Entry (RKE) System Operation 2-3
Remote Vehicle Start 2-5
Door Locks 2-7
Power Door Locks 2-7
Delayed Locking 2-8
Automatic Door Locks 2-8
Lockout Protection 2-9

Doors
Trunk 2-9

Vehicle Security
Vehicle Security 2-11
Vehicle Alarm System 2-11
Immobilizer 2-12
Immobilizer Operation 2-12

Exterior Mirrors
Convex Mirrors 2-13
Power Mirrors 2-14
Heated Mirrors 2-14
Automatic Dimming Mirror . . . 2-14

Interior Mirrors
Interior Rearview Mirrors 2-14
Manual Rearview Mirror 2-14
Automatic Dimming Rearview Mirror 2-15

Windows
Windows 2-15
Power Windows 2-15
Sun Visors 2-17

Roof
Sunroof 2-17
Convertible Top 2-19

Keys and Locks

Keys

⚠ Warning

Leaving children in a vehicle with the ignition key is dangerous for many reasons. Children or others could be badly injured or even killed. They could operate the power windows or other controls or even make the vehicle move. The windows will function with the keys in the ignition and children could be seriously injured or killed if caught in the path of a closing window. Do not leave the keys in a vehicle with children.

The key that is part of the Remote Keyless Entry (RKE) transmitter can be used for the ignition and all locks.

If it becomes difficult to turn the key, inspect the key blade for debris. Periodically clean with a brush or pick.

Press the key release button on the RKE transmitter to extend the key blade. Press the button and the key blade to retract the key.

If it becomes difficult to turn the ignition key, inspect the key blade for debris. Periodically clean with a brush or pick.

See your dealer if a new key is needed.

If locked out of the vehicle, see *Roadside Assistance Program on page 13-5*.

With an active OnStar subscription, an OnStar Advisor may remotely unlock the vehicle. See *OnStar Overview on page 14-1*.

Remote Keyless Entry (RKE) System

See *Radio Frequency Statement on page 13-12*.

If there is a decrease in the RKE operating range:

- Check the distance. The transmitter may be too far from the vehicle.
- Check the location. Other vehicles or objects may be blocking the signal.
- Check the transmitter's battery. See “Battery Replacement” later in this section.
- If the transmitter is still not working correctly, see your dealer or a qualified technician for service.

Remote Keyless Entry (RKE) System Operation

The RKE transmitter may work up to 20 m (65 ft) away from the vehicle. If equipped with remote start, the engine may be started from up to 60 m (197 ft) away outside the vehicle.

Other conditions can affect the performance of the transmitter. See *Remote Keyless Entry (RKE) System on page 2-2*.

With Remote Start Shown

(Lock): Press to lock all doors. The turn signal indicators may flash and/or the horn may sound to indicate locking. See *Vehicle Personalization on page 5-42*.

If the passenger door is open when is pressed, all doors lock.

If the driver door is open when is pressed, all doors lock except the driver door, if enabled through vehicle personalization.

Pressing may also arm the alarm system. See *Vehicle Alarm System on page 2-11*.

(Unlock): Press to unlock the driver door or all doors. See *Vehicle Personalization on page 5-42*.

The turn signal indicators may flash and/or the horn may sound to indicate unlocking. See *Vehicle Personalization on page 5-42*.

Pressing will disarm the alarm system. See *Vehicle Alarm System on page 2-11*.

HOLD (Remote Trunk Release): Press and hold to open the trunk.

(Vehicle Locator/Panic Alarm): Press and release to initiate vehicle locator. The exterior lamps flash and the horn chirps three times.

Press and hold for at least three seconds to sound the panic alarm. The horn sounds and the turn signals flash until is pressed again or the key is placed in the ignition and turned to ON/RUN.

(Remote Vehicle Start): If equipped, press and release and then immediately press and hold for at least four seconds to start the engine from outside the vehicle using the RKE transmitter. See *Remote Vehicle Start on page 2-5*.

The RKE transmitter buttons will not operate when the key is in the ignition.

Programming Transmitters to the Vehicle

Only RKE transmitters programmed to this vehicle will work. If a transmitter is lost or stolen, a replacement can be purchased and programmed through your dealer. When the replacement transmitter is programmed to this vehicle, all remaining transmitters must also be reprogrammed. Any lost or stolen transmitters will no longer work once the new transmitter is programmed.

Programming with a Recognized Transmitter

To program a new key:

1. Insert the original, already programmed key in the ignition and turn to the key to the ON/RUN position.
2. Turn the key to LOCK/OFF, and remove the key.
3. Insert the new key to be programmed and turn it to the ON/RUN position within five seconds.

   The security light will turn off once the key has been programmed.
4. Repeat Steps 1–3 if additional keys are to be programmed.

If a key is lost or damaged, see your dealer to have a new key made.

Programming without a Recognized Transmitter

Program a new key to the vehicle when a recognized key is not available. Canadian regulations require that owners see their dealer.

If there are no currently recognized keys available, follow this procedure to program the first key.

This procedure will take approximately 30 minutes to complete for the first key. The vehicle must be off and all of the keys you wish to program must be with you.

1. Insert the new vehicle key into the ignition.
2. Turn to ON/RUN. The security light will come on.
3. Wait 10 minutes until the security light turns off.
4. Turn the ignition to LOCK/OFF.
5. Repeat Steps 2–4 two more times. After the third time, turn to ON/RUN; the key is learned and all previously known keys will no longer work with the vehicle.

Remaining keys can be learned by following the procedure in “Programming with a Recognized Transmitter.”

Battery Replacement

⚠ Caution

When replacing the battery, do not touch any of the circuitry on the transmitter. Static from your body could damage the transmitter.

The battery is not rechargeable. To replace the battery:

1. Extend the key blade and open the battery cover on the back of the transmitter by prying it with a finger.
2. Remove the used battery by pushing on the battery and sliding it toward the key blade.
3. Insert the new battery, positive side facing up. Push the battery down until it is held in place. Replace with a CR2032 or equivalent battery.
4. Snap the battery cover back on to the transmitter.

Remote Vehicle Start

If equipped, this feature allows the engine to be started from outside the vehicle.

(Remote Vehicle Start): This button will be on the RKE transmitter if equipped with remote start.

The climate control system will use the previous settings during a remote start. The rear defog and heated seats, if equipped, may also come on. See “Remote Start Auto Heated Seats” under *Heated Front Seats on page 3-6* and *Vehicle Personalization on page 5-42*.

Laws in some local communities may restrict the use of remote starters. For example, some laws may require a person using remote start to have the vehicle in view. Check local regulations for any requirements.

Other conditions can affect the performance of the transmitter. See *Remote Keyless Entry (RKE) System on page 2-2*.

Starting the Engine Using Remote Start

To start the engine using the remote start feature:

1. Aim the RKE transmitter at the vehicle.
2. Press and release .

3. Immediately after completing Step 2, press and hold for at least four seconds or until the turn signal lamps flash. The turn signal lamps flashing confirms the request to remote start the vehicle has been received.

   When the engine starts, the parking lamps will turn on and remain on as long as the engine is running. The vehicle's doors will be locked and the climate control system may come on.

   The engine will continue to run for 10 minutes. Repeat the steps for a 10-minute time extension. Remote start can be extended only once.

Insert the key and turn it to ON/RUN before driving.

If the vehicle is low on fuel, do not use the remote start feature. The vehicle may run out of fuel.

Extending Engine Run Time

The engine run time can also be extended by another 10 minutes, if during the first 10 minutes Steps 1–3 are repeated while the engine is still running. This provides a total of 20 minutes.

The remote start can only be extended once.

When the remote start is extended, the second 10-minute period is added on to the first 10 minutes for a total of 20 minutes.

A maximum of two remote starts, or a remote start with an extension, are allowed between ignition cycles.

The vehicle's ignition must be changed to ON/RUN/START and then back to OFF before the remote start procedure can be used again.

Canceling a Remote Start

To cancel a remote start, do one of the following:

- Aim the RKE transmitter at the vehicle and press and hold until the parking lamps turn off.
- Turn on the hazard warning flashers.
- Turn the vehicle on and then off.

Conditions in Which Remote Start Will Not Work

The remote start will not operate if:

- The key is in the ignition.
- The hood is not closed.
- The hazard warning flashers are on.
- There is an emission control system malfunction.
- The engine coolant temperature is too high.
- The oil pressure is low.

- Two remote vehicle starts, or a single remote start with an extension, have already been used.
- The vehicle is not in P (Park).

Door Locks

⚠ Warning

Unlocked doors can be dangerous.

- Passengers, especially children, can easily open the doors and fall out of a moving vehicle. The chance of being thrown out of the vehicle in a crash is increased if the doors are not locked. So, all passengers should wear safety belts properly and the doors should be locked whenever the vehicle is driven.

(Continued)

Warning (Continued)

- Young children who get into unlocked vehicles may be unable to get out. A child can be overcome by extreme heat and can suffer permanent injuries or even death from heat stroke. Always lock the vehicle whenever leaving it.
- Outsiders can easily enter through an unlocked door when slowing or stopping the vehicle. Lock the doors to help prevent this from happening.

Manual Door Locks

Lock the doors from inside the vehicle by pressing down on the door lock knob on the top of the door.

The doors can also be unlocked from the inside by pulling the door handle. Pulling the door handle again unlatches the door.

Only the driver door has a key cylinder. Unlock the door from the outside by turning the key counterclockwise.

Lock all doors from the outside by turning the key clockwise.

The door lock cylinder turns freely when either the wrong key is used, or the correct key is not fully inserted. The free turning door lock feature prevents the lock from being forced open.

To reset the lock, turn it to the vertical position with the correct key fully inserted. Remove the key and insert it again.

If this does not reset the lock, turn the key halfway around in the cylinder and repeat the reset procedure.

Power Door Locks

If equipped, there is a power door lock switch on the instrument panel and on the front door panels.

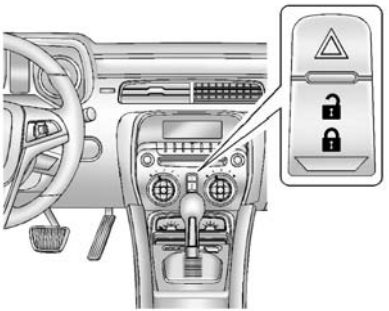

Instrument Panel

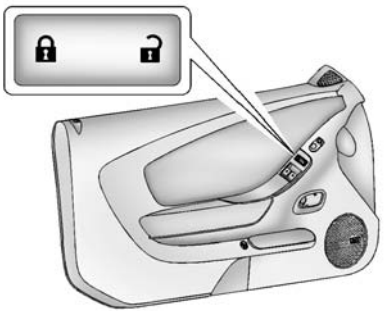

Front Door Panels

(Lock): Press to lock the doors.

(Unlock): Press to unlock the doors.

To program the power door locks, see *Vehicle Personalization on page 5-42*.

Delayed Locking

This feature delays the locking of the doors until five seconds after all doors are closed.

When is pressed on the power door lock switch while the door is open, a chime will sound three times indicating delayed locking is active.

The doors will lock automatically five seconds after all doors are closed. If a door is reopened before that time, the five-second timer will reset when all doors are closed again.

Press on the door lock switch again or press on the RKE transmitter to lock doors immediately.

This feature can also be programmed. See *Vehicle Personalization on page 5-42*.

Automatic Door Locks

When the doors are closed, the ignition is on, and the shift lever is moved out of P (Park) for automatic transmissions, or the vehicle speed is above 13 km/h (8 mph) for manual transmissions, the doors will lock.

To unlock the doors:

- Press on a power door lock switch.
- If equipped with an automatic transmission, shift the transmission into P (Park).
- If equipped with a manual transmission, remove the key from the ignition when parked.

Automatic door unlocking can be programmed through the Driver Information Center (DIC). See *Vehicle Personalization on page 5-42*.

Lockout Protection

When locking is requested with the driver door open and the key in the ignition, all the doors will lock and then the driver door will unlock. This can be manually overridden by pressing and holding 🔒 on the power door lock switch.

If Open or Unlocked Door Anti-Lockout is turned on, the vehicle is off with the driver door open, and door locking is requested, all the doors will lock and only the driver door will unlock. The Open or Unlocked Door Anti-Lockout feature can be turned on or off using the vehicle personalization menus. See *Vehicle Personalization on page 5-42*.

Doors

Trunk

⚠ Warning

Exhaust gases can enter the vehicle if it is driven with the liftgate, trunk/hatch open, or with any objects that pass through the seal between the body and the trunk/hatch or liftgate. Engine exhaust contains carbon monoxide (CO) which cannot be seen or smelled. It can cause unconsciousness and even death.

If the vehicle must be driven with the liftgate, or trunk/hatch open:

- Close all of the windows.
- Fully open the air outlets on or under the instrument panel.

(Continued)

Warning (Continued)

- Adjust the climate control system to a setting that brings in only outside air and set the fan speed to the highest setting. See “Climate Control Systems” in the Index.
- If the vehicle has a power liftgate, disable the power liftgate function.

For more information about carbon monoxide, see *Engine Exhaust on page 9-27*.

Trunk Release

To open the trunk from outside of the vehicle, press and hold HOLD on the Remote Keyless Entry (RKE) transmitter.

For automatic transmissions, the vehicle must be in P (Park). For manual transmissions, the vehicle must be off, or stationary with the parking brake set.

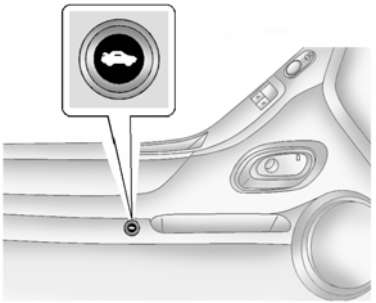

From inside the vehicle, press on the lower portion of the driver door.

Emergency Trunk Release Lock (Convertible Only)

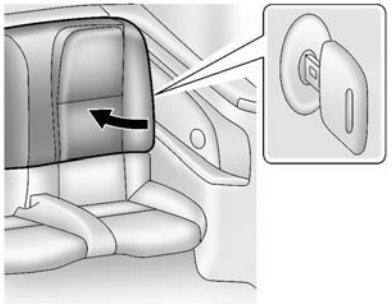

If the trunk lid cannot be opened using the RKE transmitter or the trunk release button:

1. Locate the manual release beside the rear seatback cushion on the driver side.
2. Pull the cushion to the side, then fully insert the key into the lock cylinder.
3. Firmly turn the key clockwise to unlatch the trunk lid.
4. Remove the key.

Emergency Trunk Release Handle

⚠ Caution

Do not use the emergency trunk release handle as a tie-down or anchor point when securing items in the trunk as it could damage the handle.

There is an emergency trunk release handle inside the trunk on the liner, near the trunk latch. On some vehicles, the release handle can be accessed by folding the rear seatback down. See *Rear Seats on page 3-7*.

Pull the release handle to open the trunk from the inside.

Return the release handle to its original position for proper operation.

Vehicle Security

This vehicle has theft-deterrent features; however, they do not make the vehicle impossible to steal.

Vehicle Alarm System

This vehicle has an anti-theft alarm system.

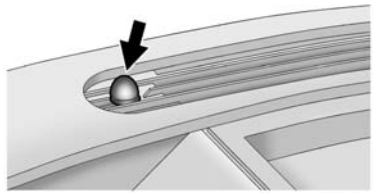

The security light, on the instrument panel near the windshield, indicates the status of the system:

Off: Alarm system is disarmed.

On Solid: Vehicle is secured during the delay to arm the system.

Fast Flash: Vehicle is unsecured. A door, the hood, or the trunk is open.

Slow Flash: Alarm system is armed.

Arming the Alarm System

1. Turn off the vehicle.
2. Lock the vehicle with one of the following:
   - Use the RKE transmitter.
   - With a door open, press the inside 🔒.
3. After 30 seconds the alarm system will arm, and the indicator light will begin to slowly flash indicating the alarm system is operating. Pressing 🔒 on the RKE transmitter a second time will bypass the 30-second delay and immediately arm the alarm system.

The vehicle alarm system will not arm if the doors are locked with the key.

If the driver door is opened without first unlocking with the RKE transmitter, the horn will chirp and the lights will flash to indicate a pre-alarm. If the vehicle is not started, or the door is not unlocked by pressing 🔓 on the RKE transmitter during the 10-second pre-alarm, the alarm will be activated.

The alarm will also be activated if the passenger door, the trunk, or the hood is opened without first disarming the system. When the alarm is activated, the turn signals flash and the horn sounds for about 30 seconds. The alarm system will then re-arm to monitor for the next unauthorized event.

Disarming the System

To disarm the system or turn off the alarm if it has been activated, do one of the following:

- Press 🔓 on the RKE transmitter.
- Start the vehicle.

To avoid setting off the alarm by accident:

- Lock the vehicle with the RKE transmitter after all occupants have left the vehicle and all doors are closed.
- Always unlock the vehicle with the RKE transmitter. Unlocking the driver door with the key will not disarm the alarm.

  Unlocking the driver door with the key will not disarm the system or turn off the alarm.

How to Detect a Tamper Condition

If 🔓 is pressed on the RKE transmitter and the horn chirps and the lights flash three times, a previous alarm occurred while the system was armed.

If the alarm has been activated, a message will appear on the DIC. See *Security Messages on page 5-40* for more information.

Immobilizer

See *Radio Frequency Statement on page 13-12*.

Immobilizer Operation

This vehicle has a passive theft-deterrent system.

The system does not have to be manually armed or disarmed.

The vehicle is automatically immobilized when the key is removed from the ignition.

The system is automatically disarmed when the vehicle is started with the correct key. The key uses a transponder that matches an immobilizer control unit in the vehicle and automatically disarms the system. Only the correct key starts the vehicle. The vehicle may not start if the key is damaged.

The immobilizer light in the instrument cluster comes on if there is a problem with arming or disarming the theft-deterrent system. See *Immobilizer Light on page 5-22*.

When trying to start the vehicle, the immobilizer light comes on briefly when the ignition is turned on.

If the engine does not start and the immobilizer light stays on, there is a problem with the system. Turn the ignition off and try again.

If the engine still does not start, and the key appears to be undamaged or the light continues to stay on, try another ignition key.

If the engine still does not start with the other key, the vehicle needs service. If the vehicle does start, the first key may be damaged. See your dealer who can service the theft-deterrent system and have a new key made.

Do not leave the key or device that disarms or deactivates the theft-deterrent system in the vehicle.

Exterior Mirrors

Convex Mirrors

⚠ Warning

A convex mirror can make things, like other vehicles, look farther away than they really are. If you cut too sharply into the right lane, you could hit a vehicle on the right. Check the inside mirror or glance over your shoulder before changing lanes.

The passenger side mirror is convex shaped. A convex mirror's surface is curved so more can be seen from the driver seat.

Power Mirrors

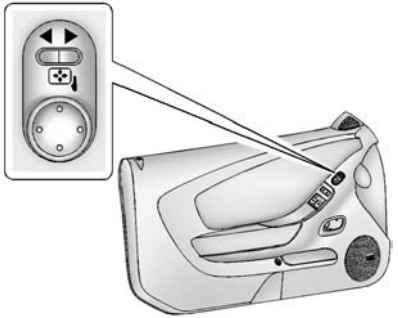

Coupe Shown, Convertible Similar

The power mirror controls are on the driver door armrest.

To adjust each mirror:

1. Press the switch to select the driver or passenger side mirror.
2. Press one of the four sides on the (control pad) to adjust the mirror.
3. Adjust each outside mirror so that a little of the vehicle and the area behind it can be seen.

Turn Signal Indicator

If equipped, an arrow on the mirror flashes in the direction of the turn or lane change.

Heated Mirrors

For vehicles with heated mirrors:

(Rear Window Defogger): Press to heat the mirrors.

See “Rear Window Defogger” under *Climate Control Systems on page 8-1*.

Automatic Dimming Mirror

If the vehicle is equipped with an automatic dimming outside mirror on the driver side, the mirror will adjust for the glare of headlamps behind you.

Interior Mirrors

Interior Rearview Mirrors

Adjust the rearview mirror for a clear view of the area behind your vehicle.

If equipped with OnStar, the vehicle may have three control buttons at the bottom of the mirror. See your dealer for more information about OnStar and how to subscribe to it. See *OnStar Overview on page 14-1*.

Do not spray glass cleaner directly on the mirror. Use a soft towel dampened with water.

Manual Rearview Mirror

If equipped with a manual rearview mirror, push the tab forward for daytime use and pull it for nighttime use to avoid glare from the headlamps from behind.

Automatic Dimming Rearview Mirror

If equipped, automatic dimming reduces the glare of headlamps from behind. The dimming feature comes on when the vehicle is started.

Windows

⚠ Warning

Never leave a child, a helpless adult, or a pet alone in a vehicle, especially with the windows closed in warm or hot weather. They can be overcome by the extreme heat and suffer permanent injuries or even death from heat stroke.

Power Windows

⚠ Warning

Children could be seriously injured or killed if caught in the path of a closing window. Never leave keys in a vehicle with children. See *Keys on page 2-1*.

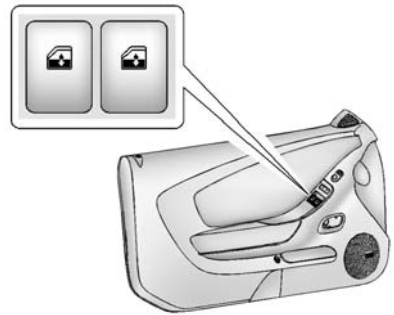

Coupe Shown, Convertible Similar

The power window switches on the driver door control all windows. The window switch on the passenger door is only for that window. Press

the front of the switch down to open the window. Pull the switch up to close it.

The switches work when the ignition is in ON/RUN or ACC/ ACCESSORY, or in Retained Accessory Power (RAP). See *Retained Accessory Power (RAP) on page 9-23*.

Window Indexing

This automatically lowers the window a small amount when the door is opened. When the door is closed, the window will raise fully.

If the vehicle loses power, you may need to reprogram the windows. Follow the procedure under "Programming the Power Windows" later in this section. If a message about the windows appears in the Driver Information Center (DIC), see *Window Messages on page 5-42*.

If the window freezes to the door, this feature may not work. To close a door with a frozen window, push the top of the window inward while closing the door so the top of the window goes under the roof seal.

Express Window Operation

Coupe and Convertible Top

The window switches have an express-up and down feature that raises or lowers the window without holding the switch. Pull the switch up or press it down all the way and release it. Stop the window by operating the switch in the same direction.

Convertible Top Only

To express-up a front window, the same side rear window must be closed.

To close all the windows, pull all window switches up fully and release within four seconds. This will result in the windows closing automatically.

Express Window Anti-Pinch Feature

When express-up is active, the window will auto-reverse if there is an obstruction or severe icing. The window returns to normal operation after the obstruction or condition is removed.

If conditions prevent a window from closing and it continues to auto-reverse, the window can be closed by having the ignition in ON/ RUN and holding the window switch up until the window is closed.

Express Window Anti-Pinch Override

⚠ Warning

If express override is activated, the window will not reverse automatically. You or others could be injured and the window could be damaged. Before you use

(Continued)

Warning (Continued)

express override, make sure that all people and obstructions are clear of the window path.

In an emergency, the anti-pinch feature can be overridden in a supervised mode. Hold the window switch all the way up to the second position. The window will rise for as long as the switch is held. Once the switch is released, the express mode is re-activated.

In this mode, the window can still close on an object in its path. Use care when using the override mode.

Programming the Power Windows

If the battery on the vehicle has been recharged or disconnected, or is not working, you may need to reprogram the windows for the express-up feature to work. Before reprogramming, replace or recharge the vehicle's battery.

To program each front window:

1. With the ignition in ON/RUN, close all doors.
2. With the window partially open, pull the power window switch up until the window is fully closed.
3. Repeat Step 2 on the other window.

The windows are now reprogrammed.

Sun Visors

Pull the sun visor down to block glare. Detach the sun visor from the center mount to pivot it to the side, if available.

Roof

Sunroof

If equipped, the sunroof switch is on the overhead console.

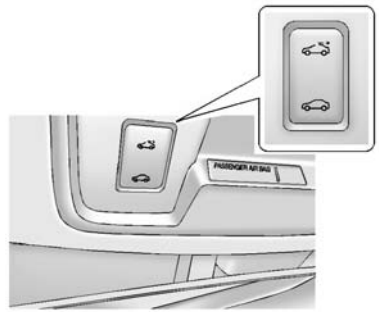

Open/Close: Press and hold the rear or front of the switch to open or close the sunroof.

Express-open: Press and release the rear of the switch two times to express-open the sunroof.

Vent: Press and release the rear of the switch to vent the sunroof.

The sunroof only operates when the ignition is in ON/RUN or ACC/ACCESSORY, or if Retained Accessory Power (RAP) is active. See *Retained Accessory Power (RAP) on page 9-23*.

Express Sunroof Operation

The sunroof can be opened without holding the switch down. Push the switch in the open direction until the second pause. The sunroof will fully open.

To stop the sunroof from moving, press either the open or close sunroof switch.

Press and release the back of the switch to open the sunroof to the vent position. Press it again to express-open the sunroof. To stop the sunroof from opening, press the switch again.

A deflector automatically raises when the sunroof is opened and retracts while the sunroof closes.

If the sunshade is closed, it opens automatically when the sunroof opens past the vented position.

⚠ Caution

Forcing the sunshade forward of the sliding glass panel may cause damage and the sunroof may not operate properly. Always close the glass panel before closing the sunshade.

To close the sunroof, press the front of the switch and hold it until the sunroof is closed. The sunroof will stop if the switch is released. Close the sunshade by hand.

The sunroof glass panel cannot be opened or closed if the vehicle has an electrical failure.

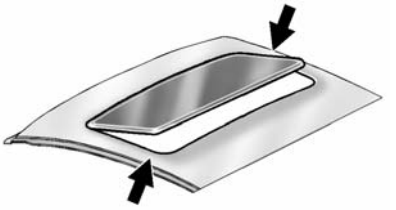

Dirt and debris may collect on the sunroof seal or in the track. This could cause an issue with sunroof operation or noise. It could also plug the water drainage system. Periodically open the sunroof and remove any obstacles or loose debris. Wipe the sunroof seal and roof sealing area using a clean cloth, mild soap, and water. Do not remove grease from the sunroof.

If water is seen dripping into the water drainage system, this is normal.

Convertible Top

Power Operation

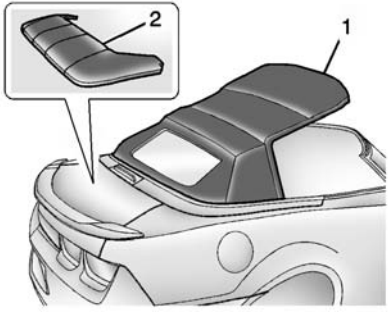

1. Convertible Top
2. Tonneau Cover (In the Trunk)

To operate the convertible top use the following steps.

⚠ Caution

Do not open the convertible top if:

- Objects are in the storage area that could damage it or break the glass rear window.
- The top is wet or dirty. This can cause stains, mildew or damage the inside of the vehicle. Dry the convertible top before lowering.

Always close the convertible top if leaving the vehicle outdoors. Leaving the convertible top open and exposing the interior of the vehicle to outdoor conditions may cause damage.

Do not operate the convertible top while driving in windy conditions.

Do not leave the convertible top in a non-secure position. Keep completely closed or open.

⚠ Caution

If you raise or lower the convertible top while the vehicle is in motion, you could damage the top or the top mechanism. The repairs would not be covered by the warranty. Always put an automatic transmission in P (Park) or a manual transmission in Neutral before raising or lowering the convertible top.

Lowering the Convertible Top

1. Park on a level surface. Place the vehicle in P (Park) with an automatic transmission and Neutral with a manual transmission. Set the parking brake.
2. Remove the tonneau cover from the trunk.
3. The rear trunk partition must be in the fastened position. See *Rear Storage on page 4-1*.

4. Remove all objects on or above the rear trunk partition.
5. Close the trunk.
6. Start the engine.

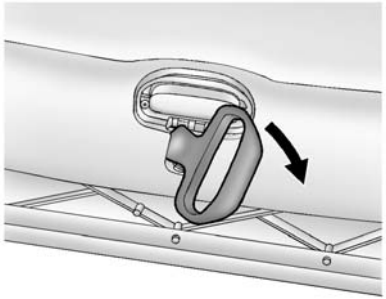

7. Release the convertible top front latch above the inside rearview mirror, by pulling down and turning it clockwise.
8. Return the convertible top front latch to the closed position.

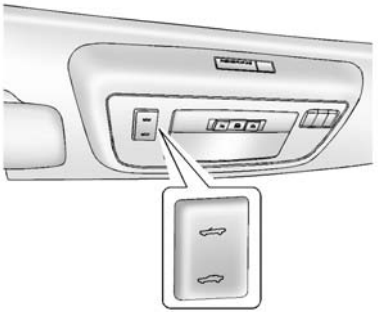

9. Press and hold the rear of the convertible top button. The windows will automatically lower and the convertible top will lower into the rear of the vehicle. A chime will sound when the convertible top has lowered completely. If the radio is on the sound may be muted for a brief time so the chime can be heard.
10. Install the tonneau cover. See *Tonneau Cover on page 4-3*.

If the convertible top is operated multiple times, the engine should be running to prevent drain on the vehicle's battery. Under certain conditions, the Driver Information Center (DIC) may display a message regarding the convertible top. See *Convertible Top Messages on page 5-33*.

⚠ Caution

Raising the top without removing the tonneau cover may damage the top components and the tonneau cover. Remove the tonneau cover before operating the convertible top.

Raising the Convertible Top

1. Park on a level surface. Place the vehicle in P (Park) with an automatic transmission and Neutral with a manual transmission. Set the parking brake.
2. Remove the tonneau cover if installed. See *Tonneau Cover on page 4-3*.

3. Move any objects that have fallen against the convertible top inside the trunk.
4. Close the trunk.
5. Start the engine.

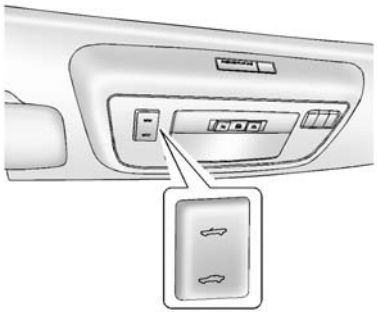

⚠ Warning

Placing hands on the top of the windshield frame when closing the convertible soft top could cause fingers to be pinched and

(Continued)

Warning (Continued)

may cause injury. Keep hands below the windshield frame when closing the convertible top.

6. Press and hold the front of the convertible top button. The top will raise and the windows will lower.
7. After the convertible top is completely raised, release the convertible top button.

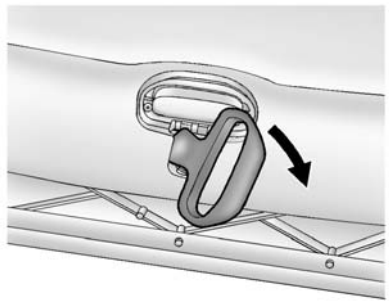

8. Release the convertible top front latch from the lock position by pulling down and turning it clockwise.
9. Lock the convertible top front latch by pulling down and turning it counterclockwise, then push it up.

If the convertible top has been opened repeatedly within a short time and is not working, wait five minutes before pressing the convertible top button again.

Operation of the convertible top cannot be attempted for five minutes after the last time the convertible top switch was pressed if the convertible top was opened repeatedly within a short time and the top has stopped functioning.

If the vehicle has lost power, the convertible top can still be raised by releasing pressure on the hydraulic pump.

Never attempt to open or close the convertible top manually without first releasing pressure.

Raising the Convertible Top Manually

1. Park on a level surface. Place the vehicle in P (Park) with an automatic transmission and Neutral with a manual transmission. Set the parking brake.
2. Remove the tonneau cover if installed. See *Tonneau Cover on page 4-3*.
3. Move any objects that have fallen against the convertible top inside the trunk.

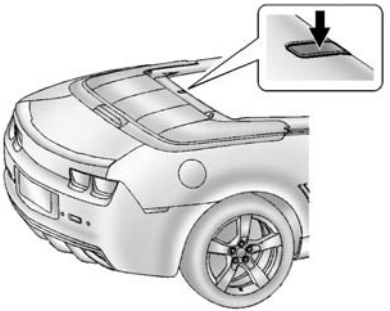

4. Remove the trim cover to access the hydraulic pressure release bolt.

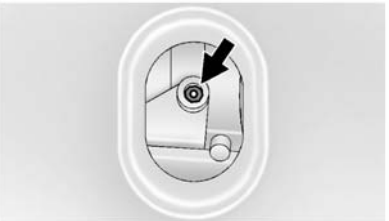

5. Locate the pressure release bolt on the top of the hydraulic pump.
6. Using the provided wrench, turn the pressure release bolt counterclockwise no more than one turn.
7. Reinstall the trim cover.
8. Pull the front of the convertible top up and forward.

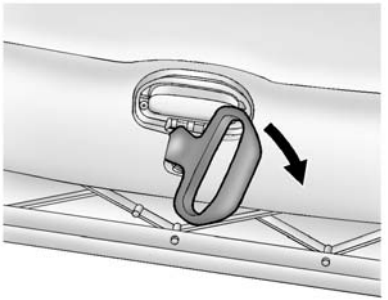

9. After the convertible top is completely raised, release the convertible top front latch from the lock position by pulling down and turning it clockwise.

10. Lock the convertible top front latch by pulling down and turning it counterclockwise, then push it up.

When power is restored to the vehicle, the pressure release bolt must be tightened using the provided wrench by turning it clockwise. The convertible top button can then be used to lower or raise the convertible top.

If the convertible top is operated multiple times, the engine should be running to prevent drain on the vehicle's battery. Under certain conditions, the Driver Information Center (DIC) may display a message regarding the convertible top. See *Convertible Top Messages on page 5-33*.

If the battery has been disconnected, the power windows must be programmed for the convertible top to operate. See *Power Windows on page 2-15*.

Cleaning the Convertible Top

The convertible top should be cleaned often. High pressure car washes may cause water to enter the vehicle.

Hand wash the convertible top in the shade. Use a mild soap, lukewarm water, and a soft sponge. A chamois or cloth may leave lint on the top, and a brush can chafe the threads in the top fabric. Do not use detergents, harsh cleaners, solvents, or bleaching agents.

Wet the entire vehicle and wash the top evenly to avoid spots or rings. Let the soap remain on the fabric for a few minutes. When the top is very dirty, use a mild foam-type cleaner. Thoroughly rinse, then let the top dry in direct sunlight.

To protect the convertible top:

- After washing, the top must be completely dry before lowering.
- Do not get any cleaner on the painted finish; it could leave streaks.
- Before going through an automatic car wash, find out if the equipment could damage the convertible top.

✍ NOTES

Seats and Restraints

Head Restraints
Head Restraints 3-2

Front Seats
Seat Adjustment 3-3
Power Seat Adjustment 3-4
Reclining Seatbacks 3-4
Seatback Latches 3-5
Heated Front Seats 3-6

Rear Seats
Rear Seats 3-7

Safety Belts
Safety Belts 3-8
How to Wear Safety Belts Properly 3-9
Lap-Shoulder Belt 3-10
Safety Belt Use During Pregnancy 3-13
Safety Belt Extender 3-14
Safety System Check 3-14
Safety Belt Care 3-14
Replacing Safety Belt System Parts after a Crash 3-15

Airbag System
Airbag System 3-15
Where Are the Airbags? 3-17
When Should an Airbag Inflate? 3-19
What Makes an Airbag Inflate? 3-20
How Does an Airbag Restrain? 3-20
What Will You See after an Airbag Inflates? 3-21
Passenger Sensing System 3-22
Servicing the Airbag-Equipped Vehicle 3-26
Adding Equipment to the Airbag-Equipped Vehicle . . . 3-26
Airbag System Check 3-27
Replacing Airbag System Parts after a Crash 3-28

Child Restraints
Older Children 3-28
Infants and Young Children 3-30
Child Restraint Systems 3-33
Where to Put the Restraint . . . 3-35
Lower Anchors and Tethers for Children (LATCH System) 3-36
Replacing LATCH System Parts After a Crash 3-42
Securing Child Restraints (Rear Seat) 3-42
Securing Child Restraints (Front Passenger Seat) 3-44

Head Restraints

If equipped with base seats, the vehicle's front seats have adjustable head restraints in the outboard seating positions.

If equipped with high performance seats, the vehicle's front seats have head restraints in the outboard seating positions that cannot be adjusted.

⚠ Warning

With head restraints that are not installed and adjusted properly, there is a greater chance that occupants will suffer a neck/spinal injury in a crash. Do not drive until the head restraints for all occupants are installed and adjusted properly.

If equipped with base seats, adjust the head restraint so that the top of the restraint is at the same height as the top of the occupant's head. This position reduces the chance of a neck injury in a crash.

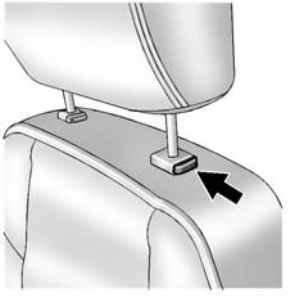

The height of the head restraint can be adjusted. Pull the head restraint up to raise it. Try to move the head restraint to make sure that it is locked in place.

To lower the head restraint, press the button located on the top of the seatback and push the restraint down. Try to move the head restraint after the button is released to make sure that it is locked in place.

The front seat outboard head restraints are not removable.

Front Seats

Seat Adjustment

⚠ Warning

You can lose control of the vehicle if you try to adjust a driver seat while the vehicle is moving. Adjust the driver seat only when the vehicle is not moving.

Seat Position

High Performance Seat Shown, Other Manual Seats Similar

To adjust a manual seat, if equipped:

1. Lift the handle under the seat to unlock it.
2. Slide the seat and release the handle.
3. Try to move the seat back and forth to be sure it is locked in place.

Height Adjustment

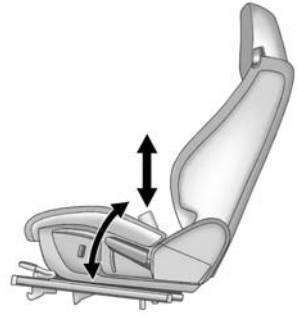

Base Manual Seat Shown, High Performance Seat Similar

If equipped, move the lever up or down repeatedly to manually raise or lower the seat.

Power Seat Adjustment

High Performance Seat Shown, Other Power Seats Similar

To adjust a power seat, if equipped:

- Move the seat forward or rearward by sliding the horizontal control forward or rearward.
- Raise or lower the front part of the seat cushion by moving the front of the horizontal control up or down.
- Raise or lower the entire seat by moving the entire horizontal control up or down.

Reclining Seatbacks

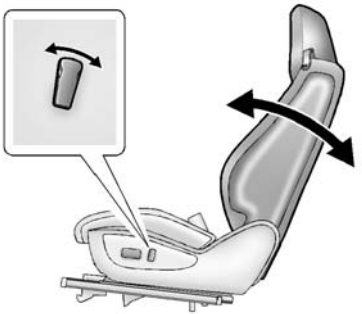

Base Power Seat Shown, High Performance Seat Similar

If equipped, to adjust the seatback:

- Tilt the top of the control rearward to recline.
- Tilt the top of the control forward to raise.

⚠ Warning

Sitting in a reclined position when the vehicle is in motion can be dangerous. Even when buckled up, the safety belts cannot do their job.

The shoulder belt will not be against your body. Instead, it will be in front of you. In a crash, you could go into it, receiving neck or other injuries.

The lap belt could go up over your abdomen. The belt forces would be there, not at your pelvic bones. This could cause serious internal injuries.

For proper protection when the vehicle is in motion, have the seatback upright. Then sit well back in the seat and wear the safety belt properly.

Do not have a seatback reclined if the vehicle is moving.

Seatback Latches

To access the rear seats, pull up on the latch on the rear of the driver or front passenger seatback. Fold the seatback forward.

⚠ Warning

If either seatback is not locked, it could move forward in a sudden stop or crash. That could cause injury to the person sitting there.

(Continued)

Warning (Continued)

Always push and pull on the seatbacks to be sure they are locked.

To return the seatback to the upright position, lift the seatback and manually push it rearward until it locks in place. Push and pull on the seatback to make sure it is locked.

The power recline control is deactivated when the seatback is folded forward and will not function until the seatback has been manually returned to the upright, locked position. This is normal. Do not use the power recline control on the outboard side of the seat to raise the seatback. See *Reclining Seatbacks on page 3-4*.

Heated Front Seats

⚠ Warning

If you cannot feel temperature change or pain to the skin, the seat heater may cause burns. To reduce the risk of burns, people with such a condition should use care when using the seat heater, especially for long periods of time. Do not place anything on the seat that insulates against heat, such as a blanket, cushion, cover, or similar item. This may cause the seat heater to overheat. An overheated seat heater may cause a burn or may damage the seat.

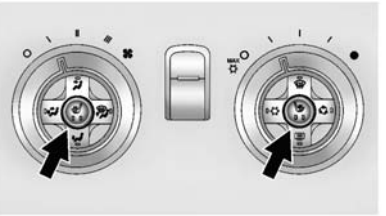

If available, press or to turn on the heated seat. A light indicates this feature is on.

To operate, the engine must be running.

Press the button once for the highest setting. With each press of the button, the heated seat will change to the next lower setting, and then the off setting. Two lights indicate the highest setting, and one light indicates the lowest.

The passenger seat may take longer to heat up.

Remote Start Auto Heated Seats

When it is cold outside, the heated seats can be turned on automatically during a remote start. They are canceled when the ignition is turned on. Press the button to use the heated seats after the vehicle is started.

The heated seat indicator lights do not turn on during a remote start.

The temperature performance of an unoccupied seat may be reduced. This is normal.

The heated seats will not turn on during a remote start unless they are enabled in the vehicle personalization menu. See *Remote Vehicle Start on page 2-5* and *Vehicle Personalization on page 5-42*.

Rear Seats

⚠ Caution

On convertible models, there is a speaker between the two rear seating positions on the seatback. If someone leans on the speaker, if cargo is loaded on it, or if liquid is spilled on it, damage could occur. Do not lean against the speaker, place cargo on the speaker, or spill liquids on the speaker.

The rear seat has two designated seating positions. If equipped, the coupe seat can be folded for more cargo space. Fold the seat only when the vehicle is parked.

To fold the seatback down:

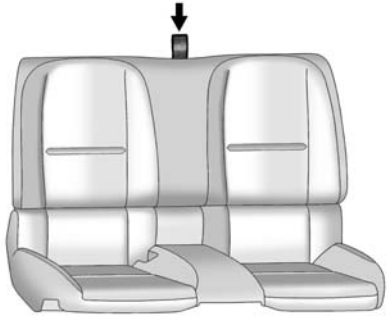

1. Pull on the strap on the top of the rear seatback.
2. Fold the seatback down.

⚠ Warning

A safety belt that is improperly routed, not properly attached, or twisted will not provide the protection needed in a crash. The person wearing the belt could be seriously injured. After raising the rear seatback, always check to be sure that the safety belts are properly routed and attached, and are not twisted.

Lift the seatback up to raise it, and push it back to lock it into place. Make sure the safety belt is not twisted or caught in the seatback.

Safety Belts

This section of the manual describes how to use safety belts properly. It also describes some things not to do with safety belts.

⚠ Warning

Do not let anyone ride where a safety belt cannot be worn properly. In a crash, if you or your passenger(s) are not wearing safety belts, injuries can be much worse than if you are wearing safety belts. You can be seriously injured or killed by hitting things inside the vehicle harder or by being ejected from the vehicle. In addition, anyone who is not buckled up can strike other passengers in the vehicle.

It is extremely dangerous to ride in a cargo area, inside or outside of a vehicle. In a collision, passengers riding in these areas

(Continued)

Warning (Continued)

are more likely to be seriously injured or killed. Do not allow passengers to ride in any area of the vehicle that is not equipped with seats and safety belts.

Always wear a safety belt, and check that all passenger(s) are restrained properly too.

This vehicle has indicators as a reminder to buckle the safety belts. See *Safety Belt Reminders on page 5-14*.

Why Safety Belts Work

When riding in a vehicle, you travel as fast as the vehicle does. If the vehicle stops suddenly, you keep going until something stops you. It could be the windshield, the instrument panel, or the safety belts!

When you wear a safety belt, you and the vehicle slow down together. There is more time to stop because you stop over a longer distance and, when worn properly, your strongest bones take the forces from the

safety belts. That is why wearing safety belts makes such good sense.

Questions and Answers About Safety Belts

Q: Will I be trapped in the vehicle after a crash if I am wearing a safety belt?

A: You *could* be — whether you are wearing a safety belt or not. Your chance of being conscious during and after a crash, so you *can* unbuckle and get out, is *much* greater if you are belted.

Q: If my vehicle has airbags, why should I have to wear safety belts?

A: Airbags are supplemental systems only; so they work *with* safety belts — not instead of them. Whether or not an airbag is provided, all occupants still have to buckle up to get the most protection.

Also, in nearly all states and in all Canadian provinces, the law requires wearing safety belts.

How to Wear Safety Belts Properly

This section is only for people of adult size.

There are special things to know about safety belts and children. And there are different rules for smaller children and infants. If a child will be riding in the vehicle, see *Older Children on page 3-28* or *Infants and Young Children on page 3-30*. Follow those rules for everyone's protection.

It is very important for all occupants to buckle up. Statistics show that unbelted people are hurt more often in crashes than those who are wearing safety belts.

There are important things to know about wearing a safety belt properly.

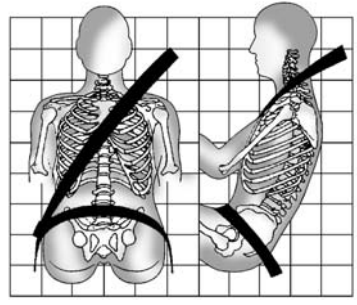

- Sit up straight and always keep your feet on the floor in front of you.
- Always use the correct buckle for your seating position.
- Wear the lap part of the belt low and snug on the hips, just touching the thighs. In a crash, this applies force to the strong pelvic bones and you would be less likely to slide under the lap belt. If you slid under it, the belt would apply force on your abdomen. This could cause serious or even fatal injuries.

- Wear the shoulder belt over the shoulder and across the chest. These parts of the body are best able to take belt restraining forces. The shoulder belt locks if there is a sudden stop or crash.

⚠ Warning

You can be seriously injured, or even killed, by not wearing your safety belt properly.

- Never allow the lap or shoulder belt to become loose or twisted.
- Never wear the shoulder belt under both arms or behind your back.
- Never route the lap or shoulder belt over an armrest.

Lap-Shoulder Belt

All seating positions in the vehicle have a lap-shoulder belt.

The following instructions explain how to wear a lap-shoulder belt properly.

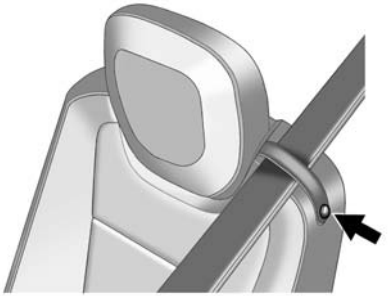

1. If the seat has a safety belt guide, and the safety belt is not routed through the guide, snap the guide around the belt webbing. Be sure the belt is not twisted.
2. Adjust the seat, if the seat is adjustable, so you can sit up straight. To see how, see “Seats” in the Index.

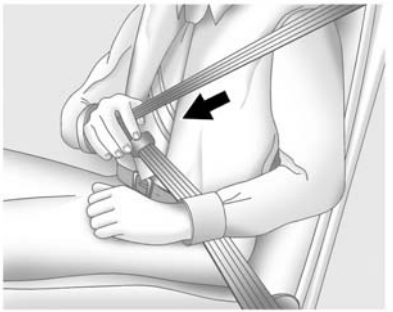

3. Pick up the latch plate and pull the belt across you. Do not let it get twisted.

   The lap-shoulder belt may lock if you pull the belt across you very quickly. If this happens, let the belt go back slightly to unlock it. Then pull the belt across you more slowly.

   If the shoulder portion of a passenger belt is pulled out all the way, the child restraint locking feature may be engaged. If this happens, let the belt go back all the way and start again.

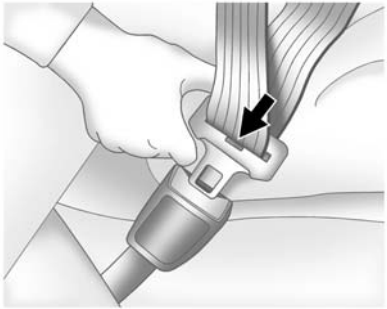

4. Push the latch plate into the buckle until it clicks.

   Pull up on the latch plate to make sure it is secure. If the belt is not long enough, see *Safety Belt Extender on page 3-14*.

   Position the release button on the buckle so that the safety belt could be quickly unbuckled if necessary.

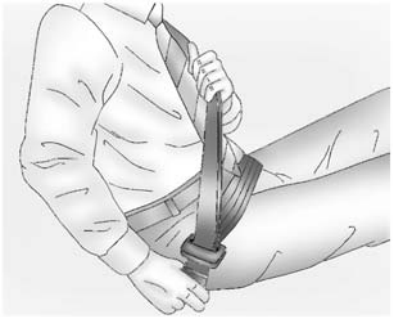

5. To make the lap part tight, pull up on the shoulder belt.

   It may be necessary to pull stitching on the safety belt through the latch plate to fully tighten the lap belt on smaller occupants.

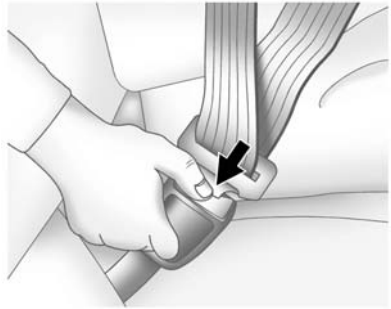

To unlatch the belt, push the button on the buckle. The belt should return to its stowed position.

Before a door is closed, be sure the safety belt is out of the way. If a door is slammed against a safety belt, damage can occur to both the safety belt and the vehicle.

Safety Belt Pretensioners

This vehicle has safety belt pretensioners for the front outboard occupants. Although the safety belt pretensioners cannot be seen, they are part of the safety belt assembly.

They can help tighten the safety belts during the early stages of a moderate to severe frontal, near-frontal, or rear crash if the threshold conditions for pretensioner activation are met. If the vehicle has side impact airbags, safety belt pretensioners can help tighten the safety belts in a side crash. And, if the vehicle has roof-rail airbags the safety belt pretensioners can help tighten the safety belts during a rollover crash.

Pretensioners work only once. If the pretensioners activate in a crash, the pretensioners and probably other parts of the vehicle's safety belt system will need to be replaced. See *Replacing Safety Belt System Parts after a Crash on page 3-15*.

Rear Safety Belt Comfort Guides

This vehicle may have rear safety belt comfort guides. If not, they are available through your dealer.

Rear shoulder belt comfort guides may provide added safety belt comfort for older children who have outgrown booster seats and for some adults. When installed on a shoulder belt, the comfort guide positions the shoulder belt away from the neck and head.

To install:

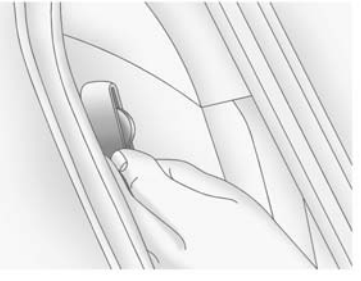

1. Pull the elastic cord out from between the edge of the seatback and the interior body to remove the guide from its storage clip.

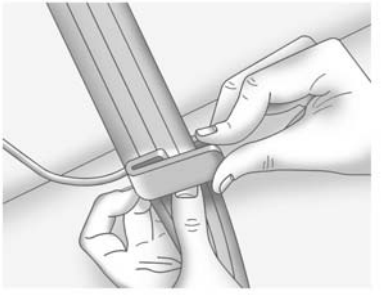

2. Place the guide over the belt and insert the two edges of the belt into the slots of the guide.

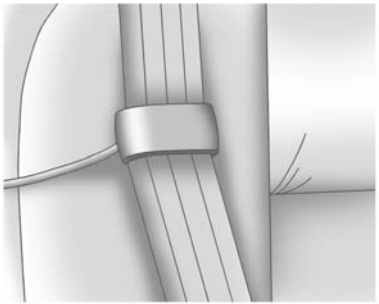

3. Be sure that the belt is not twisted and it lies flat. The elastic cord must be behind the belt with the plastic guide on the front.

⚠ Warning

A safety belt that is not properly worn may not provide the protection needed in a crash. The person wearing the belt could be seriously injured. The shoulder belt should go over the shoulder

(Continued)

Warning (Continued)

and across the chest. These parts of the body are best able to take belt restraining forces.

4. Buckle, position, and release the safety belt as described previously in this section. Make sure the shoulder portion of the belt is on the shoulder and not falling off of it. The belt should be close to, but not contacting, the neck.

To remove and store the comfort guide, squeeze the belt edges together so that the safety belt can be removed from the guide. Slide the guide onto the clip, leaving only the loop of the elastic cord exposed.

Properly secure the guide before folding the seatback.

Safety Belt Use During Pregnancy

Safety belts work for everyone, including pregnant women. Like all occupants, they are more likely to be seriously injured if they do not wear safety belts.

A pregnant woman should wear a lap-shoulder belt, and the lap portion should be worn as low as possible, below the rounding, throughout the pregnancy.

The best way to protect the fetus is to protect the mother. When a safety belt is worn properly, it is more likely that the fetus will not be hurt in a crash. For pregnant women, as for anyone, the key to making safety belts effective is wearing them properly.

Safety Belt Extender

If the vehicle's safety belt will fasten around you, you should use it.

But if a safety belt is not long enough, your dealer will order you an extender. When you go in to order it, take the heaviest coat you will wear, so the extender will be long enough for you. To help avoid personal injury, do not let someone else use it, and use it only for the seat it is made to fit. The extender has been designed for adults. Never use it for securing child seats. To wear it, attach it to the regular safety belt. See the instruction sheet that comes with the extender.

Safety System Check

Now and then, check that the safety belt reminder light, safety belts, buckles, latch plates, retractors, and anchorages are all working properly. Look for any other loose or damaged safety belt system parts that might keep a safety belt system from doing its job. See your dealer to have it repaired. Torn or frayed safety belts may not protect you in a crash. They can rip apart under impact forces. If a belt is torn or frayed, get a new one right away.

Make sure the safety belt reminder light is working. See *Safety Belt Reminders on page 5-14*.

Keep safety belts clean and dry. See *Safety Belt Care on page 3-14*.

Safety Belt Care

Keep belts clean and dry.

⚠ Warning

Do not bleach or dye safety belts. It may severely weaken them. In a crash, they might not be able to provide adequate protection. Clean safety belts only with mild soap and lukewarm water.

Replacing Safety Belt System Parts after a Crash

⚠ Warning

A crash can damage the safety belt system in the vehicle.
A damaged safety belt system may not properly protect the person using it, resulting in serious injury or even death in a crash. To help make sure the safety belt systems are working properly after a crash, have them inspected and any necessary replacements made as soon as possible.

After a minor crash, replacement of safety belts may not be necessary. But the safety belt assemblies that were used during any crash may have been stressed or damaged.

See your dealer to have the safety belt assemblies inspected or replaced.

New parts and repairs may be necessary even if the safety belt system was not being used at the time of the crash.

Have the safety belt pretensioners checked if the vehicle has been in a crash, or if the airbag readiness light stays on after you start the vehicle or while you are driving. See *Airbag Readiness Light on page 5-15*.

Airbag System

The vehicle has the following airbags:

- A frontal airbag for the driver.
- A frontal airbag for the front outboard passenger.
- A seat-mounted side impact airbag for the driver.
- A seat-mounted side impact airbag for the front outboard passenger.

The vehicle may also have the following airbags:

- A roof-rail airbag for the driver and the passenger seated directly behind the driver.
- A roof-rail airbag for the front outboard passenger and the passenger seated directly behind the front outboard passenger.

All vehicle airbags in your vehicle will have the word AIRBAG in the trim or on a label near the deployment opening.

For frontal airbags, the word AIRBAG will appear on the middle part of the steering wheel for the driver and on the instrument panel for the front outboard passenger.

For seat-mounted side impact airbags, the word AIRBAG is on the side of the seatback closest to the door.

For roof-rail airbags, the word AIRBAG is on the ceiling or trim.

Airbags are designed to supplement the protection provided by safety belts. Even though today's airbags are also designed to help reduce the risk of injury from the force of an inflating bag, all airbags must inflate very quickly to do their job.

Here are the most important things to know about the airbag system:

⚠ Warning

You can be severely injured or killed in a crash if you are not wearing your safety belt, even with airbags. Airbags are designed to work with safety belts, not replace them. Also, airbags are not designed to inflate in every crash. In some crashes safety belts are the only restraint. See *When Should an Airbag Inflate? on page 3-19*.

Wearing your safety belt during a crash helps reduce the chance of hitting things inside the vehicle or being ejected from it. Airbags are “supplemental restraints” to the safety belts. Everyone in the vehicle should wear a safety belt properly, whether or not there is an airbag for that person.

⚠ Warning

Because airbags inflate with great force and faster than the blink of an eye, anyone who is up against, or very close to any airbag when it inflates can be seriously injured or killed. Do not sit unnecessarily close to any airbag, as you would be if sitting on the edge of the seat or leaning forward. Safety belts help keep you in position before and during a crash. Always wear a safety belt, even with airbags. The driver should sit as far back as possible while still maintaining control of the vehicle.

Occupants should not lean on or sleep against the door or side windows in seating positions with seat-mounted side impact airbags and/or roof-rail airbags.

⚠ Warning

Children who are up against, or very close to, any airbag when it inflates can be seriously injured or killed. Always secure children properly in the vehicle. To read how, see *Older Children on page 3-28* or *Infants and Young Children on page 3-30*.

There is an airbag readiness light on the instrument cluster, which shows the airbag symbol.

The system checks the airbag electrical system for malfunctions. The light tells you if there is an electrical problem. See *Airbag Readiness Light on page 5-15*.

Where Are the Airbags?

The driver frontal airbag is in the middle of the steering wheel.

The front outboard passenger frontal airbag is in the instrument panel on the passenger side.

Coupe Models, Driver Side Shown, Passenger Side Similar

On coupe models, the seat-mounted side impact airbags for the driver and front outboard passenger are in the side of the seatbacks closest to the door.

Convertible Models, Driver Side Shown, Passenger Side Similar

On convertible models, the seat-mounted side impact airbags for the driver and front outboard passenger are in the side of the seatbacks closest to the door.

Coupe Models, Driver Side Shown, Passenger Side Similar

On coupe models, the roof-rail airbags for the driver, front outboard passenger, and second row outboard passengers are in the ceiling above the side windows.

⚠ Warning

If something is between an occupant and an airbag, the airbag might not inflate properly or it might force the object into

(Continued)

Warning (Continued)

that person causing severe injury or even death. The path of an inflating airbag must be kept clear. Do not put anything between an occupant and an airbag, and do not attach or put anything on the steering wheel hub or on or near any other airbag covering.

Do not use seat accessories that block the inflation path of a seat-mounted side impact airbag.

Never secure anything to the roof of a vehicle with roof-rail airbags by routing a rope or tie-down through any door or window opening. If you do, the path of an inflating roof-rail airbag will be blocked.

When Should an Airbag Inflate?

This vehicle is equipped with airbags. See *Airbag System on page 3-15*. Airbags are designed to inflate if the impact exceeds the specific airbag system's deployment threshold. Deployment thresholds are used to predict how severe a crash is likely to be in time for the airbags to inflate and help restraint the occupants. The vehicle has electronic frontal sensors that help the airbag system determine the severity of the impact. Deployment thresholds can vary with specific vehicle design.

Frontal airbags are designed to inflate in moderate to severe frontal or near-frontal crashes to help reduce the potential for severe injuries, mainly to the driver's or front outboard passenger's head and chest.

Whether the frontal airbags will or should inflate is not based primarily on how fast the vehicle is traveling. It depends on what is hit, the direction of the impact, and how quickly the vehicle slows down.

Frontal airbags may inflate at different crash speeds depending on whether the vehicle hits an object straight on or at an angle, and whether the object is fixed or moving, rigid or deformable, narrow or wide.

Frontal airbags are not intended to inflate during vehicle rollovers, in rear impacts, or in many side impacts.

In addition, the vehicle has advanced technology frontal airbags. Advanced technology frontal airbags adjust the restraint according to crash severity.

The vehicle also has a seat position sensor that enables the sensing system to monitor the position of the driver seat. The seat position sensor provides information that is used to adjust the deployment of the frontal airbags.

Seat-mounted side impact airbags are designed to inflate in moderate to severe side crashes, depending on the location of the impact. Seat-mounted side impact airbags are not designed to inflate in frontal impacts, near-frontal impacts, rollovers, or rear impacts.
A seat-mounted side impact airbag is designed to inflate on the side of the vehicle that is struck.

Roof-rail airbags, if equipped, are designed to inflate in moderate to severe side crashes, depending on the location of the impact. In addition, these roof-rail airbags are designed to inflate during a rollover or in a severe frontal impact. Roof-rail airbags are not designed to inflate in rear impacts. Both roof-rail airbags will inflate when either side of the vehicle is struck or if the sensing system predicts that the vehicle is about to roll over on its side, or in a severe frontal impact.

In any particular crash, no one can say whether an airbag should have inflated simply because of the vehicle damage or repair costs.

What Makes an Airbag Inflate?

In a deployment event, the sensing system sends an electrical signal triggering a release of gas from the inflator. Gas from the inflator fills the airbag causing the bag to break out of the cover. The inflator, the airbag, and related hardware are all part of the airbag module.

For airbag locations, see *Where Are the Airbags? on page 3-17*.

How Does an Airbag Restrain?

In moderate to severe frontal or near frontal collisions, even belted occupants can contact the steering wheel or the instrument panel. In moderate to severe side collisions, even belted occupants can contact the inside of the vehicle.

Airbags supplement the protection provided by safety belts by distributing the force of the impact more evenly over the occupant's body.

Rollover capable roof-rail airbags are designed to help contain the head and chest of occupants in the outboard seating positions in the first and second rows. The rollover capable roof-rail airbags are designed to help reduce the risk of full or partial ejection in rollover events, although no system can prevent all such ejections.

But airbags would not help in many types of collisions, primarily because the occupant's motion is not toward those airbags. See *When Should an Airbag Inflate? on page 3-19*.

Airbags should never be regarded as anything more than a supplement to safety belts.

What Will You See after an Airbag Inflates?

After the frontal airbags and seat-mounted side impact airbags inflate, they quickly deflate, so quickly that some people may not even realize an airbag inflated. Roof-rail airbags may still be at least partially inflated for some time after they inflate. Some components of the airbag module may be hot for several minutes. For location of the airbags, see *Where Are the Airbags? on page 3-17*.

The parts of the airbag that come into contact with you may be warm, but not too hot to touch. There may be some smoke and dust coming from the vents in the deflated airbags. Airbag inflation does not prevent the driver from seeing out of the windshield or being able to steer the vehicle, nor does it prevent people from leaving the vehicle.

⚠ Warning

When an airbag inflates, there may be dust in the air. This dust could cause breathing problems for people with a history of asthma or other breathing trouble. To avoid this, everyone in the vehicle should get out as soon as it is safe to do so. If you have breathing problems but cannot get out of the vehicle after an airbag inflates, then get fresh air by opening a window or a door. If you experience breathing problems following an airbag deployment, you should seek medical attention.

The vehicle has a feature that may automatically unlock the doors, turn on the interior lamps and hazard warning flashers, and shut off the fuel system after the airbags inflate. The feature may also activate, without airbag inflation, after an event that exceeds a predetermined threshold. You can lock the doors, and turn off the interior lamps, and turn off the hazard warning flashers by using the controls for those features.

⚠ Warning

A crash severe enough to inflate the airbags may have also damaged important functions in the vehicle, such as the fuel system, brake and steering systems, etc. Even if the vehicle appears to be drivable after a moderate crash, there may be concealed damage that could make it difficult to safely operate the vehicle.

Use caution if you should attempt to restart the engine after a crash has occurred.

In many crashes severe enough to inflate the airbag, windshields are broken by vehicle deformation.

Additional windshield breakage may also occur from the front outboard passenger airbag.

- Airbags are designed to inflate only once. After an airbag inflates, you will need some new parts for the airbag system. If you do not get them, the airbag system will not be there to help protect you in another crash. A new system will include airbag modules and possibly other parts. The service manual for the vehicle covers the need to replace other parts.
- The vehicle has a crash sensing and diagnostic module which records information after a crash. See *Vehicle Data Recording and Privacy on page 13-14* and *Event Data Recorders on page 13-14*.
- Let only qualified technicians work on the airbag systems. Improper service can mean that an airbag system will not work properly. See your dealer for service.

Passenger Sensing System

The vehicle has a passenger sensing system for the front outboard passenger position. The passenger airbag status indicator will be visible on the overhead console when the vehicle is started.

United States

Canada and Mexico

The words ON and OFF, or the symbol for on and off, will be visible during the system check. When the system check is complete, either the word ON or OFF, or the symbol for on or off, will be visible. See *Passenger Airbag Status Indicator on page 5-15*.

The passenger sensing system will turn off the front outboard passenger frontal airbag under

certain conditions. No other airbag is affected by the passenger sensing system.

The passenger sensing system works with sensors that are part of the front outboard passenger seat. The sensors are designed to detect the presence of a properly seated occupant and determine if the front outboard passenger frontal airbag should be allowed to inflate or not.

According to accident statistics, children are safer when properly secured in a rear seat in the correct child restraint for their weight and size.

Whenever possible, children age 12 and under should be secured in a rear seating position.

Never put a rear-facing child seat in the front. This is because the risk to the rear-facing child is so great if the airbag deploys.

⚠ Warning

A child in a rear-facing child restraint can be seriously injured or killed if the passenger frontal airbag inflates. This is because the back of the rear-facing child restraint would be very close to the inflating airbag. A child in a forward-facing child restraint can be seriously injured or killed if the passenger frontal airbag inflates and the passenger seat is in a forward position.

Even if the passenger sensing system has turned off the passenger frontal airbag, no system is fail-safe. No one can guarantee that an airbag will not inflate under some unusual circumstance, even though the airbag is off.

(Continued)

Warning (Continued)

Secure rear-facing child restraints in a rear seat, even if the airbag is off. If you secure a forward-facing child restraint in the front outboard passenger seat, always move the seat as far back as it will go. It is better to secure the child restraint in a rear seat.

The passenger sensing system is designed to turn off the front outboard passenger frontal airbag if:

- The front outboard passenger seat is unoccupied.
- The system determines that an infant is present in a rear-facing infant seat.
- The system determines that a small child is present in a child restraint.

- The system determines that a small child is present in a booster seat.
- A front outboard passenger takes his/her weight off of the seat for a period of time.
- The front outboard passenger seat is occupied by a smaller person, such as a child who has outgrown child restraints.
- There is a critical problem with the airbag system or the passenger sensing system.

When the passenger sensing system has turned off the front outboard passenger frontal airbag, the off indicator will light and stay lit to remind you that the airbag is off. See *Passenger Airbag Status Indicator on page 5-15*.

The passenger sensing system is designed to turn on the front outboard passenger frontal airbag any time the system senses that a person of adult size is sitting properly in the front outboard passenger seat. When the passenger sensing system has allowed the airbag to be enabled, the on indicator will light and stay lit to remind you that the airbag is active.

For some children who have outgrown child restraints and for very small adults, the passenger sensing system may or may not turn off the front outboard passenger frontal airbag, depending upon the person's seating posture and body build. Everyone in the vehicle who has outgrown child restraints should wear a safety belt properly — whether or not there is an airbag for that person.

⚠ Warning

If the airbag readiness light ever comes on and stays on, it means that something may be wrong with the airbag system. To help avoid injury to yourself or others, have the vehicle serviced right

(Continued)

Warning (Continued)

away. See *Airbag Readiness Light on page 5-15* for more information, including important safety information.

If the On Indicator is Lit for a Child Restraint

If a child restraint has been installed and the on indicator is lit:

1. Turn the vehicle off.
2. Remove the child restraint from the vehicle.
3. Remove any additional items from the seat such as blankets, cushions, seat covers, seat heaters, or seat massagers.
4. Reinstall the child restraint following the directions provided by the child restraint

manufacturer and refer to *Securing Child Restraints (Rear Seat) on page 3-42* or *Securing Child Restraints (Front Passenger Seat) on page 3-44*.

5. If, after reinstalling the child restraint and restarting the vehicle, the on indicator is still lit, turn the vehicle off. Then slightly recline the vehicle seatback and adjust the seat cushion, if adjustable, to make sure that the vehicle seatback is not pushing the child restraint into the seat cushion.

   Also make sure the child restraint is not trapped under the vehicle head restraint. If this happens, adjust the head restraint. See *Head Restraints on page 3-2*.

6. Restart the vehicle.

   If the on indicator is still lit, secure the child in the child restraint in a rear seat position in the vehicle, and check with your dealer.

If the Off Indicator is Lit for an Adult-Sized Occupant

If a person of adult size is sitting in the front outboard passenger seat, but the off indicator is lit, it could be because that person is not sitting properly in the seat. If this happens, use the following steps to allow the system to detect that person and enable the front outboard passenger frontal airbag:

1. Turn the vehicle off.
2. Remove any additional material from the seat, such as blankets, cushions, seat covers, seat heaters, or seat massagers.
3. Place the seatback in the fully upright position.
4. Have the person sit upright in the seat, centered on the seat cushion, with legs comfortably extended.
5. Restart the vehicle and have the person remain in this position for two to three minutes after the on indicator is lit.

⚠ Warning

If the front outboard passenger airbag is turned off for an adult-sized occupant, the airbag will not be able to inflate and help protect that person in a crash, resulting in an increased risk of serious injury or even death. An adult-sized occupant should not

(Continued)

Warning (Continued)

ride in the front outboard passenger seat, if the passenger airbag off indicator is lit.

Additional Factors Affecting System Operation

Safety belts help keep the passenger in position on the seat during vehicle maneuvers and braking, which helps the passenger sensing system maintain the passenger airbag status. See “Safety Belts” and “Child Restraints” in the Index for additional information about the importance of proper restraint use.

A thick layer of additional material, such as a blanket or cushion, or aftermarket equipment such as seat covers, seat heaters, and seat massagers can affect how well the passenger sensing system operates. We recommend that you not use seat covers or other aftermarket equipment except when approved by GM for your specific vehicle. See *Adding Equipment to the Airbag-Equipped Vehicle on page 3-26* for more information about modifications that can affect how the system operates.

⚠ Warning

Stowing of articles under the passenger seat or between the passenger seat cushion and seatback may interfere with the proper operation of the passenger sensing system.

Servicing the Airbag-Equipped Vehicle

Airbags affect how the vehicle should be serviced. There are parts of the airbag system in several places around the vehicle. Your dealer and the service manual have information about servicing the vehicle and the airbag system. To purchase a service manual, see *Service Publications Ordering Information on page 13-11*.

⚠ Warning

For up to 10 seconds after the vehicle is turned off and the battery is disconnected, an airbag can still inflate during improper service. You can be injured if you are close to an airbag when it inflates. Avoid yellow connectors. They are probably part of the airbag system. Be sure to follow proper service procedures, and make sure the person performing work for you is qualified to do so.

Adding Equipment to the Airbag-Equipped Vehicle

Adding accessories that change the vehicle's frame, bumper system, height, front end, or side sheet metal, may keep the airbag system from working properly. The

operation of the airbag system can also be affected by changing or moving any parts of the front seats, safety belts, the airbag sensing and diagnostic module, steering wheel, instrument panel, any of the airbag modules, ceiling or pillar garnish trim, front sensors, side impact sensors, or airbag wiring.

Your dealer and the service manual have information about the location of the airbag sensors, sensing and diagnostic module, and airbag wiring.

In addition, the vehicle has a passenger sensing system for the front outboard passenger position, which includes sensors that are part of the passenger seat. The passenger sensing system may not operate properly if the original seat trim is replaced with non-GM covers, upholstery, or trim; or with GM covers, upholstery, or trim designed for a different vehicle. Any object, such as an aftermarket seat heater or a comfort-enhancing pad or device, installed under or on top of the seat fabric, could also interfere with the operation of the passenger sensing system. This could either prevent proper deployment of the passenger airbag(s) or prevent the passenger sensing system from properly turning off the passenger airbag(s). See *Passenger Sensing System on page 3-22*.

If the vehicle has rollover roof-rail airbags, see *Different Size Tires and Wheels on page 10-75*.

If you have to modify your vehicle because you have a disability and you have questions about whether the modifications will affect the vehicle's airbag system, or if you have questions about whether the airbag system will be affected if the vehicle is modified for any other reason, call Customer Assistance. See *Customer Assistance Offices on page 13-3*.

Airbag System Check

The airbag system does not need regularly scheduled maintenance or replacement. Make sure the airbag readiness light is working. See *Airbag Readiness Light on page 5-15*.

⚠ Caution

If an airbag covering is damaged, opened, or broken, the airbag may not work properly. Do not open or break the airbag coverings. If there are any opened or broken airbag coverings, have the airbag covering and/or airbag module replaced. For the location of the airbags, see *Where Are the Airbags? on page 3-17*. See your dealer for service.

Replacing Airbag System Parts after a Crash

⚠ Warning

A crash can damage the airbag systems in the vehicle.
A damaged airbag system may not work properly and may not protect you and your passenger(s) in a crash, resulting in serious injury or even death. To help make sure the airbag systems are working properly after a crash, have them inspected and any necessary replacements made as soon as possible.

If an airbag inflates, you will need to replace airbag system parts. See your dealer for service.

If the airbag readiness light stays on after the vehicle is started or comes on when you are driving, the airbag system may not work properly. Have the vehicle serviced right away. See *Airbag Readiness Light on page 5-15*.

Child Restraints

Older Children

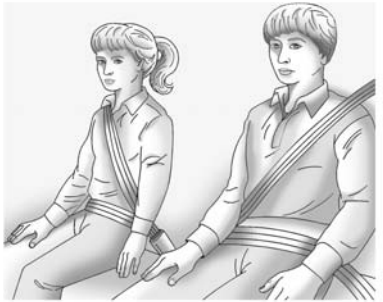

Older children who have outgrown booster seats should wear the vehicle safety belts.

The manufacturer instructions that come with the booster seat state the weight and height limitations for that booster. Use a booster seat with a lap-shoulder belt until the child passes the fit test below:

- Sit all the way back on the seat. Do the knees bend at the seat edge? If yes, continue. If no, return to the booster seat.
- Buckle the lap-shoulder belt. Does the shoulder belt rest on the shoulder? If yes, continue. If no, try using the rear safety belt comfort guide, if available. See “Rear Safety Belt Comfort Guides” under *Lap-Shoulder Belt on page 3-10*. If a comfort guide is not available, or if the shoulder belt still does not rest on the shoulder, then return to the booster seat.
- Does the lap belt fit low and snug on the hips, touching the thighs? If yes, continue. If no, return to the booster seat.
- Can proper safety belt fit be maintained for the length of the trip? If yes, continue. If no, return to the booster seat.

Q: What is the proper way to wear safety belts?

A: An older child should wear a lap-shoulder belt and get the additional restraint a shoulder belt can provide. The shoulder belt should not cross the face or neck. The lap belt should fit snugly below the hips, just touching the top of the thighs. This applies belt force to the child's pelvic bones in a crash. It should never be worn over the abdomen, which could cause severe or even fatal internal injuries in a crash.

Also see “Rear Safety Belt Comfort Guides” under *Lap-Shoulder Belt on page 3-10*.

According to accident statistics, children are safer when properly restrained in a rear seating position.

In a crash, children who are not buckled up can strike other people who are buckled up, or can be thrown out of the vehicle. Older children need to use safety belts properly.

⚠ Warning

Never allow more than one child to wear the same safety belt. The safety belt cannot properly spread the impact forces. In a crash, they can be crushed together and seriously injured. A safety belt must be used by only one person at a time.

⚠ Warning

Never allow a child to wear the safety belt with the shoulder belt behind their back. A child can be seriously injured by not wearing the lap-shoulder belt properly. In a crash, the child would not be restrained by the shoulder belt. The child could move too far forward increasing the chance of head and neck injury. The child might also slide under the lap

(Continued)

Warning (Continued)

belt. The belt force would then be applied right on the abdomen. That could cause serious or fatal injuries. The shoulder belt should go over the shoulder and across the chest.

Infants and Young Children

Everyone in a vehicle needs protection! This includes infants and all other children. Neither the distance traveled nor the age and size of the traveler changes the need, for everyone, to use safety restraints. In fact, the law in every state in the United States and in every Canadian province says children up to some age must be restrained while in a vehicle.

⚠ Warning

Children can be seriously injured or strangled if a shoulder belt is wrapped around their neck. The shoulder belt can tighten but cannot be loosened if it is locked. The shoulder belt locks when it is pulled all the way out of the retractor. It unlocks when the shoulder belt is allowed to go all

(Continued)

Warning (Continued)

the way back into the retractor, but it cannot do this if it is wrapped around a child's neck. If the shoulder belt is locked and tightened around a child's neck, the only way to loosen the belt is to cut it.

Never leave children unattended in a vehicle and never allow children to play with the safety belts.

Every time infants and young children ride in vehicles, they should have the protection provided by appropriate child restraints. Neither the vehicle's safety belt system nor its airbag system is designed for them.

Children who are not restrained properly can strike other people, or can be thrown out of the vehicle.

⚠ Warning

Never hold an infant or a child while riding in a vehicle. Due to crash forces, an infant or a child will become so heavy it is not possible to hold it during a crash. For example, in a crash at only 40 km/h (25 mph), a 5.5 kg (12 lb) infant will suddenly become a 110 kg (240 lb) force on a person's arms. An infant should be secured in an appropriate restraint.

⚠ Warning

Children who are up against, or very close to, any airbag when it inflates can be seriously injured or killed. Never put a rear-facing child restraint in the front outboard seat. Secure a rear-facing child restraint in a rear seat. It is also better to secure a forward-facing child restraint in a rear seat. If you must secure a forward-facing child restraint in

(Continued)

Warning (Continued)

the front outboard seat, always move the front passenger seat as far back as it will go.

Q: What are the different types of add-on child restraints?

A: Add-on child restraints, which are purchased by the vehicle owner, are available in four basic types. Selection of a particular restraint should take into consideration not only the child's weight, height, and age but also whether or not the restraint will be compatible with the motor vehicle in which it will be used.

For most basic types of child restraints, there are many different models available. When purchasing a child restraint, be sure it is designed to be used in a motor vehicle. If it is, the restraint will have a label saying that it meets federal motor vehicle safety standards.

The restraint manufacturer instructions that come with the restraint state the weight and height limitations for a particular child restraint. In addition, there are many kinds of restraints available for children with special needs.

⚠ Warning

To reduce the risk of neck and head injury during a crash, infants need complete support. In a crash, if an infant is in a rear-facing child restraint, the crash forces can be distributed across the strongest part of an infant's body, the back and shoulders. Infants should always be secured in rear-facing child restraints.

⚠ Warning

A young child's hip bones are still so small that the vehicle's regular safety belt may not remain low on the hip bones, as it should. Instead, it may settle up around the child's abdomen. In a crash, the belt would apply force on a body area that is unprotected by any bony structure. This alone could cause serious or fatal injuries. To reduce the risk of serious or fatal injuries during a crash, young children should always be secured in appropriate child restraints.

Child Restraint Systems

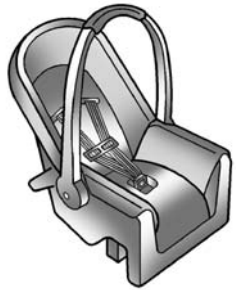

Rear-Facing Infant Seat

A rear-facing infant seat provides restraint with the seating surface against the back of the infant.

The harness system holds the infant in place and, in a crash, acts to keep the infant positioned in the restraint.

Forward-Facing Child Seat

A forward-facing child seat provides restraint for the child's body with the harness.

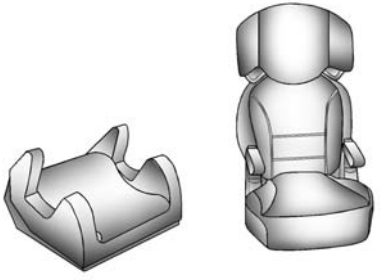

Booster Seats

A booster seat is a child restraint designed to improve the fit of the vehicle's safety belt system.
A booster seat can also help a child to see out the window.

Securing an Add-On Child Restraint in the Vehicle

⚠ Warning

A child can be seriously injured or killed in a crash if the child restraint is not properly secured in the vehicle. Secure the child restraint properly in the vehicle using the vehicle safety belt or LATCH system, following the instructions that came with that child restraint and the instructions in this manual.

To help reduce the chance of injury, the child restraint must be secured in the vehicle. Child restraint systems must be secured in vehicle seats by lap belts or the lap belt portion of a lap-shoulder belt, or by the LATCH system. See *Lower Anchors and Tethers for Children (LATCH System) on page 3-36*.

Children can be endangered in a crash if the child restraint is not properly secured in the vehicle.

When securing an add-on child restraint, refer to the instructions that come with the restraint which may be on the restraint itself or in a booklet, or both, and to this manual. The child restraint instructions are important, so if they are not available, obtain a replacement copy from the manufacturer.

Keep in mind that an unsecured child restraint can move around in a collision or sudden stop and injure people in the vehicle. Be sure to properly secure any child restraint in the vehicle — even when no child is in it.

In some areas of the United States and Canada, Certified Child Passenger Safety Technicians (CPSTs) are available to inspect and demonstrate how to correctly use and install child restraints. In the U.S., refer to the National Highway Traffic Safety

Administration (NHTSA) website to locate the nearest child safety seat inspection station. For CPST availability in Canada, check with Transport Canada or the Provincial Ministry of Transportation office.

Securing the Child Within the Child Restraint

⚠ Warning

A child can be seriously injured or killed in a crash if the child is not properly secured in the child restraint. Secure the child properly following the instructions that came with that child restraint.

Where to Put the Restraint

According to accident statistics, children and infants are safer when properly restrained in a child restraint system or infant restraint system secured in a rear seating position.

Whenever possible, children aged 12 and under should be secured in a rear seating position.

Never put a rear-facing child seat in the front. This is because the risk to the rear-facing child is so great if the airbag deploys.

⚠ Warning

A child in a rear-facing child restraint can be seriously injured or killed if the front passenger airbag inflates. This is because the back of the rear-facing child restraint would be very close to the inflating airbag. A child in a forward-facing child restraint can be seriously injured or killed if the front passenger airbag inflates and the passenger seat is in a forward position.

Even if the passenger sensing system has turned off the front passenger frontal airbag, no

(Continued)

Warning (Continued)

system is fail-safe. No one can guarantee that an airbag will not deploy under some unusual circumstance, even though it is turned off.

Secure rear-facing child restraints in a rear seat, even if the airbag is off. If you secure a forward-facing child restraint in the front seat, always move the front passenger seat as far back as it will go. It is better to secure the child restraint in a rear seat.

See *Passenger Sensing System on page 3-22* for additional information.

When securing a child restraint in a rear seating position, study the instructions that came with the child restraint to make sure it is compatible with this vehicle.

Child restraints and booster seats vary considerably in size, and some may fit in certain seating positions better than others. Always make sure the child restraint is properly secured.

Depending on where you place the child restraint and the size of the child restraint, you may not be able to access adjacent safety belt assemblies or LATCH anchors for additional passengers or child restraints. Adjacent seating positions should not be used if the child restraint prevents access to or interferes with the routing of the safety belt.

Wherever a child restraint is installed, be sure to secure the child restraint properly.

Keep in mind that an unsecured child restraint can move around in a collision or sudden stop and injure people in the vehicle. Be sure to properly secure any child restraint in the vehicle — even when no child is in it.

Lower Anchors and Tethers for Children (LATCH System)

The LATCH system secures a child restraint during driving or in a crash. LATCH attachments on the child restraint are used to attach the child restraint to the anchors in the vehicle. The LATCH system is designed to make installation of a child restraint easier.

In order to use the LATCH system in your vehicle, you need a child restraint that has LATCH attachments. LATCH-compatible rear-facing and forward-facing child seats can be properly installed using either the LATCH anchors or the vehicle's safety belts. Do not use both the safety belts and the LATCH anchorage system to secure a rear-facing or forward-facing child seat.

Booster seats use the vehicle's safety belts to secure the child in the booster seat. If the manufacturer recommends that the booster seat be secured with the LATCH system, this can be done as long as the booster seat can be positioned properly and there is no interference with the proper positioning of the lap-shoulder belt on the child.

Make sure to follow the instructions that came with the child restraint, and also the instructions in this manual.

When installing a child restraint with a top tether, you must also use either the lower anchors or the safety belts to properly secure the child restraint. A child restraint must never be installed using only the top tether and anchor.

The LATCH anchorage system can be used until the combined weight of the child plus the child restraint is 29.5 kg (65 lbs). Use the safety belt alone instead of the LATCH anchorage system once the combined weight is more than 29.5 kg (65 lbs).

The following explains how to attach a child restraint with these attachments in the vehicle.

Not all vehicle seating positions or child restraints have lower anchors and attachments or top tether anchors and attachments.

In Canada, the law requires that forward-facing child restraints have a top tether, and that the tether be attached.

Convertible models do not have top tether anchors to secure a child restraint. If a national or local law requires that the top tether be anchored, do not use a child restraint in this vehicle because a top tether cannot be properly anchored.

Lower Anchors

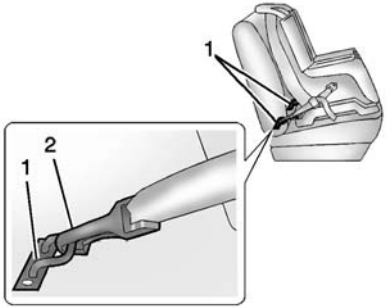

Lower anchors (1) are metal bars built into the vehicle. There are two lower anchors for each LATCH seating position that will accommodate a child restraint with lower attachments (2).

Top Tether Anchor

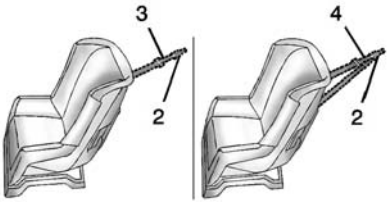

A top tether (3, 4) anchors the top of the child restraint to the vehicle. A top tether anchor is built into the vehicle. The top tether attachment (2) on the child restraint connects to the top tether anchor in the vehicle in order to reduce the forward movement and rotation of the child restraint during driving or in a crash.

The child restraint may have a single tether (3) or a dual tether (4). Either will have a single attachment (2) to secure the top tether to the anchor.

Some child restraints that have a top tether are designed for use with or without the top tether being attached. Others require the top tether always to be attached. In Canada, the law requires that forward-facing child restraints have a top tether, and that the tether be attached. Be sure to read and follow the instructions for the child restraint.

Lower Anchor and Top Tether Anchor Locations

Rear Seat — Coupe Model

(Top Tether Anchor): Seating positions with top tether anchors.

(Lower Anchor): Seating positions with two lower anchors.

Rear Seat — Convertible Model

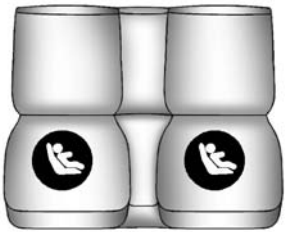

(Lower Anchor): Seating positions with two lower anchors.

Lower Anchors

To assist in locating the lower anchors, each seating position with lower anchors has two labels, near the crease between the seatback and the seat cushion.

Top Tether Anchors

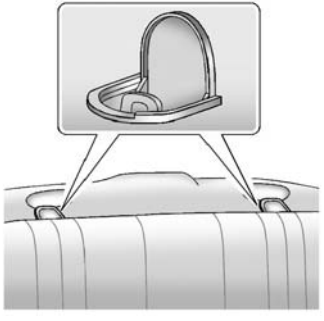

On coupe models, the top tether anchors are on the rear seatback filler panel.

To assist in locating the top tether anchors, the top tether anchor symbol is on the cover of the anchor.

Convertible top models do not have top tether anchors to be used to secure a child restraint in any seating position.

Be sure to use an anchor on the same side of the vehicle as the seating position where the child restraint will be placed.

Do not secure a child restraint in a position without a top tether anchor if a national or local law requires that the top tether be attached, or if the instructions that come with the child restraint say that the top tether must be attached.

According to accident statistics, children and infants are safer when properly restrained in a child restraint system or infant restraint system secured in a rear seating position. See *Where to Put the Restraint on page 3-35* for additional information.

Securing a Child Restraint Designed for the LATCH System

⚠ Warning

If a LATCH-type child restraint is not attached to anchors or with the safety belt, the child restraint will not be able to protect the child correctly. In a crash, the child could be seriously injured or killed. Install a LATCH-type child restraint properly using the anchors, or use the vehicle safety belts to secure the restraint,

(Continued)

Warning (Continued)

following the instructions that came with the child restraint and the instructions in this manual.

⚠ Warning

Do not attach more than one child restraint to a single anchor. Attaching more than one child restraint to a single anchor could cause the anchor or attachment to come loose or even break during a crash. A child or others could be injured. To reduce the risk of serious or fatal injuries during a crash, attach only one child restraint per anchor.

⚠ Warning

Children can be seriously injured or strangled if a shoulder belt is wrapped around their neck. The shoulder belt can tighten but cannot be loosened if it is locked. The shoulder belt locks when it is pulled all the way out of the retractor. It unlocks when the shoulder belt is allowed to go all the way back into the retractor, but it cannot do this if it is wrapped around a child's neck. If the shoulder belt is locked and tightened around a child's neck, the only way to loosen the belt is to cut it.

Buckle any unused safety belts behind the child restraint so children cannot reach them. Pull the shoulder belt all the way out of the retractor to set the lock, and tighten the belt behind the child restraint after the child restraint has been installed.

⚠ Caution

Do not let the LATCH attachments rub against the vehicle's safety belts. This may damage these parts. If necessary, move buckled safety belts to avoid rubbing the LATCH attachments.

Do not fold the empty rear seat with a safety belt buckled. This could damage the safety belt or the seat. Unbuckle and return the safety belt to its stowed position, before folding the seat.

If you need to secure more than one child restraint in the rear seat, see *Where to Put the Restraint on page 3-35*.

This system is designed to make installation of child restraints easier. When using lower anchors, do not use the vehicle's safety belts. Instead, use the vehicle's anchors and child restraint attachments to

secure the restraints. Some restraints also use another vehicle anchor to secure the top tether.

1. Attach and tighten the lower attachments to the lower anchors. If the child restraint does not have lower attachments, secure the child restraint with the safety belts and top tether, if equipped. Refer to the child restraint manufacturer instructions and the instructions in this manual.
   1.1. Find the lower anchors for the desired seating position.
   1.2. Put the child restraint on the seat.
   1.3. Attach and tighten the lower attachments on the child restraint to the lower anchors.
2. On coupe models, if the child restraint manufacturer recommends that the top tether be attached, attach and tighten the top tether to the top tether anchor, if equipped. Refer to the child restraint instructions and the following steps:
   2.1. Find the top tether anchor.
   2.2. Route, attach, and tighten the top tether according to the child restraint instructions and the following instructions:

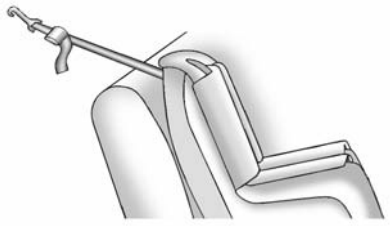

If the child restraint has a single tether, route the tether over the seatback.

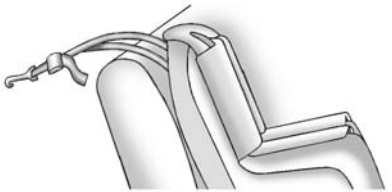

If the child restraint has a dual tether, route the tether over the seatback.

3. Before placing a child in the child restraint, make sure it is securely held in place. To check, grasp the child restraint at the LATCH path and attempt to move it side to side and back and forth. There should be no more than 2.5 cm (1 in) of movement, for proper installation.

Replacing LATCH System Parts After a Crash

⚠ Warning

A crash can damage the LATCH system in the vehicle. A damaged LATCH system may not properly secure the child restraint, resulting in serious injury or even death in a crash. To help make sure the LATCH system is working properly after a crash, see your dealer to have the system inspected and any necessary replacements made as soon as possible.

If the vehicle has the LATCH system and it was being used during a crash, new LATCH system parts may be needed.

New parts and repairs may be necessary even if the LATCH system was not being used at the time of the crash.

Securing Child Restraints (Rear Seat)

When securing a child restraint in a rear seating position, study the instructions that came with the child restraint to make sure it is compatible with this vehicle.

If the child restraint has the LATCH system, see *Lower Anchors and Tethers for Children (LATCH System) on page 3-36* for how and where to install your child restraint using LATCH. If a child restraint is secured in the vehicle using a safety belt and it uses a top tether, see *Lower Anchors and Tethers for Children (LATCH System) on page 3-36* for top tether anchor locations.

Do not secure a child restraint in a position without a top tether anchor if a national or local law requires that the top tether be anchored, or if the instructions that come with the child restraint say that the top strap must be anchored.

In Canada, the law requires that forward-facing child restraints have a top tether, and that the tether be attached.

If the child restraint or vehicle seat position does not have the LATCH system, you will be using the safety belt to secure the child restraint in this position. Be sure to follow the instructions that came with the child restraint. Secure the child in the child restraint when and as the instructions say.

If more than one child restraint needs to be installed in the rear seat, be sure to read *Where to Put the Restraint on page 3-35*.

1. Put the child restraint on the seat.
2. Pick up the latch plate, and run the lap and shoulder portions of the vehicle's safety belt through or around the restraint. The child restraint instructions will show you how.

3. Push the latch plate into the buckle until it clicks.

   Position the release button on the buckle so that the safety belt could be quickly unbuckled if necessary.

4. Pull the shoulder belt all the way out of the retractor to set the lock. When the retractor lock is set, the belt can be tightened but not pulled out of the retractor.

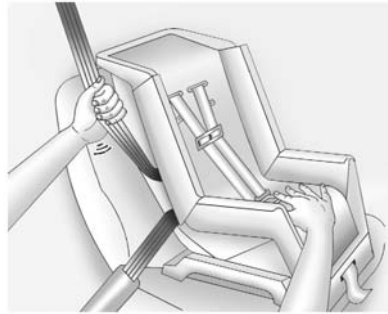

5. To tighten the belt, push down on the child restraint, pull the shoulder portion of the belt to tighten the lap portion of the belt, and feed the shoulder belt back into the retractor. When installing a forward-facing child restraint, it may be helpful to use your knee to push down on the child restraint as you tighten the belt.

   Try to pull the belt out of the retractor to make sure the retractor is locked. If the retractor is not locked, repeat Steps 4 and 5.

6. If the child restraint has a top tether, follow the child restraint manufacturer instructions regarding the use of the top tether. See *Lower Anchors and Tethers for Children (LATCH System) on page 3-36*.
7. Before placing a child in the child restraint, make sure it is securely held in place. To check, grasp the child restraint at the safety belt path and attempt to move it side to side and back and forth. When the child restraint is properly installed, there should be no more than 2.5 cm (1 in) of movement.

To remove the child restraint, unbuckle the vehicle safety belt and let it return to the stowed position. If the top tether is attached to a top tether anchor, disconnect it.

Securing Child Restraints (Front Passenger Seat)

This vehicle has airbags. A rear seat is a safer place to secure a forward-facing child restraint. See *Where to Put the Restraint on page 3-35*.

In addition, the vehicle has a passenger sensing system which is designed to turn off the front outboard passenger frontal airbag under certain conditions. See *Passenger Sensing System on page 3-22* and *Passenger Airbag Status Indicator on page 5-15* for more information, including important safety information.

Never put a rear-facing child seat in the front. This is because the risk to the rear-facing child is so great if the airbag deploys.

⚠ Warning

A child in a rear-facing child restraint can be seriously injured or killed if the front outboard passenger frontal airbag inflates. This is because the back of the rear-facing child restraint would be very close to the inflating airbag. A child in a forward-facing child restraint can be seriously injured or killed if the front outboard passenger frontal airbag inflates and the passenger seat is in a forward position.

Even if the passenger sensing system has turned off the front outboard passenger frontal airbag, no system is fail-safe. No one can guarantee that an airbag will not deploy under some unusual circumstance, even though it is turned off.

(Continued)

Warning (Continued)

Secure rear-facing child restraints in a rear seat, even if the airbag is off. If you secure a forward-facing child restraint in the front seat, always move the front passenger seat as far back as it will go. It is better to secure the child restraint in a rear seat.

See *Passenger Sensing System on page 3-22* for additional information.

If the child restraint uses a top tether, see *Lower Anchors and Tethers for Children (LATCH System) on page 3-36* for top tether anchor locations.

Do not secure a child seat in a position without a top tether anchor if a national or local law requires that the top tether be anchored, or if the instructions that come with the child restraint say that the top strap must be anchored.

In Canada, the law requires that forward-facing child restraints have a top tether, and that the tether be attached.

When using the lap-shoulder belt to secure the child restraint in this position, follow the instructions that came with the child restraint and the following instructions:

1. Move the seat as far back as it will go before securing the forward-facing child restraint.

   When the passenger sensing system has turned off the front outboard passenger frontal airbag, the off indicator on the passenger airbag status indicator should light and stay lit when the vehicle is started. See *Passenger Airbag Status Indicator on page 5-15*.

2. Put the child restraint on the seat.

   If the seat has a safety belt guide, remove the safety belt from the guide by unsnapping the guide on the seat. Do not secure the child restraint with the safety belt routed through the guide.

3. Pick up the latch plate, and run the lap and shoulder portions of the vehicle's safety belt through or around the restraint. The child restraint instructions will show you how.

4. Push the latch plate into the buckle until it clicks.

   Position the release button on the buckle, so that the safety belt could be quickly unbuckled if necessary.

5. Pull the shoulder belt all the way out of the retractor to set the lock. When the retractor lock is set, the belt can be tightened but not pulled out of the retractor.

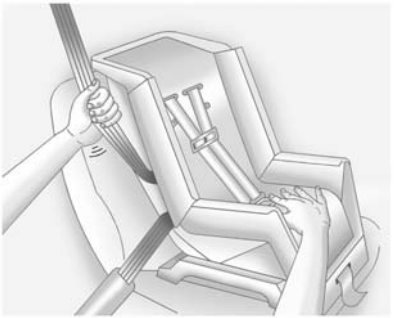

6. To tighten the belt, push down on the child restraint, pull the shoulder portion of the belt to tighten the lap portion of the belt, and feed the shoulder belt back into the retractor. When installing a forward-facing child restraint, it may be helpful to use your knee to push down on the child restraint as you tighten the belt.

   Try to pull the belt out of the retractor to make sure the retractor is locked. If the retractor is not locked, repeat Steps 5 and 6.

7. Before placing a child in the child restraint, make sure it is securely held in place. To check, grasp the child restraint at the safety belt path and attempt to move it side to side and back and forth. When the child restraint is properly installed, there should be no more than 2.5 cm (1 in) of movement.

If the airbag is off, the off indicator in the passenger airbag status indicator will come on and stay on when the vehicle is started.

If a child restraint has been installed and the on indicator is lit, see “If the On Indicator is Lit for a Child Restraint” under *Passenger Sensing System on page 3-22* for more information.

To remove the child restraint, unbuckle the vehicle safety belt and let it return to the stowed position.

If the seat has a safety belt guide, return the safety belt into the guide by snapping the guide around the webbing.

Storage

Storage Compartments
Storage Compartments 4-1
Glove Box 4-1
Rear Storage 4-1
Center Console Storage 4-2

Additional Storage Features
Tonneau Cover 4-3
Convenience Net 4-5

Storage Compartments

⚠ Warning

Do not store heavy or sharp objects in storage compartments. In a crash, these objects may cause the cover to open and could result in injury.

Glove Box

Open the glove box by lifting up on the lever. Use the key to lock and unlock the glove box.

Rear Storage

Rear Trunk Partition

The trunk partition keeps cargo away from the convertible top.

The trunk partition attaches to the sides of the trunk to protect the convertible top or can be rolled up and stored when the convertible top is up.

Fastened Position

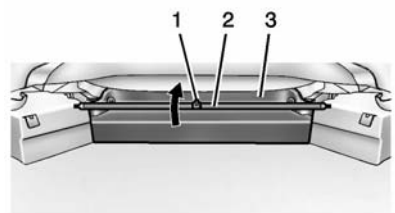

1. Pull on the handle (1) to detach and roll out the trunk partition (2) at the front of the trunk (3).

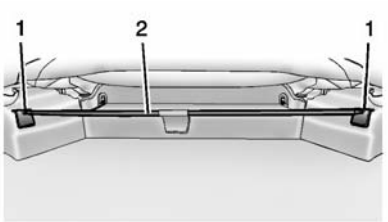

2. Attach the trunk partition (2) into the brackets (1).
3. Remove any objects from the top of the trunk partition (2).

Stored Position

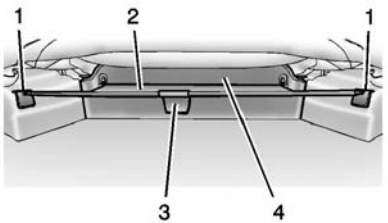

1. Pull the handle (3) toward the rear of the trunk while pulling up to release the trunk partition (2) from the brackets (1).
2. Hold the handle (3) and slowly let the trunk partition (2) roll up toward the front of the trunk (4).

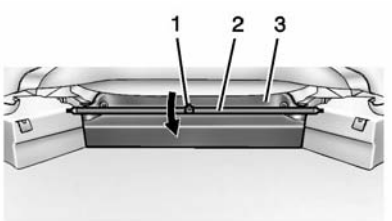

3. Attach the handle (1) to the rolled-up trunk partition (2) at the front of the trunk (3).

See *Convertible Top Messages on page 5-33*.

Center Console Storage

To open, lift the latch on the front edge of the armrest.

There is an accessory power outlet. If equipped, there is a USB port and auxiliary jack in the storage area. See *Power Outlets on page 5-5*, *Auxiliary Devices on page 7-14*, and the infotainment manual.

Additional Storage Features

Tonneau Cover

Installation

1. Remove the tonneau cover storage bag from the trunk and remove the tonneau cover.

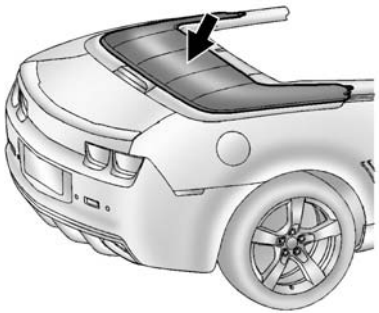

2. Unfold and place the tonneau cover on the vehicle.

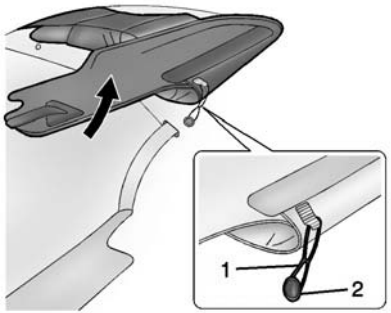

3. Fold the sides of the tonneau cover over. Attach the cord (1) at the front edge of the tonneau cover to the post (2) on the back seat rear panel on both sides.

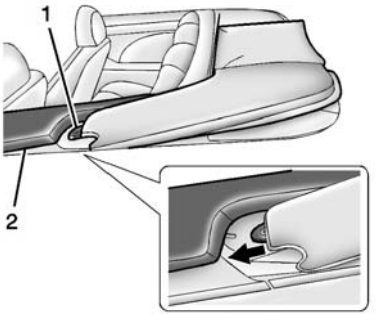

4. Insert the tab (1) under the trim (2) on both sides.

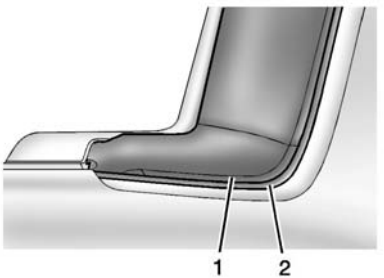

5. Push the outside rim (1) of the tonneau cover under the vehicle trim (2) on both sides.

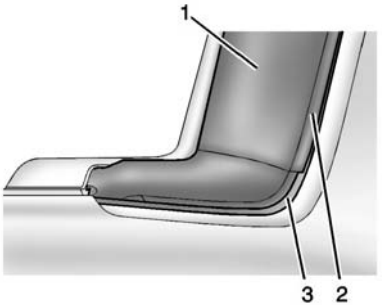

6. Push the edge (2) of the center of the tonneau cover (1) under the vehicle trim (3).

Removal

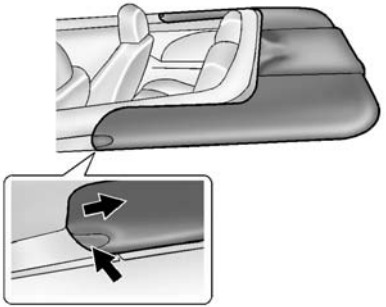

1. Grip the tonneau cover at the notch and pull back to release the tab on both sides.

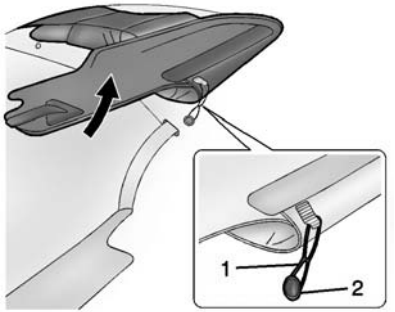

2. Fold the sides of the tonneau cover over and remove the cord (1) from the post (2) on the back seat rear panel on both sides.
3. Fold the tonneau cover, place it in the storage bag, and store it in the trunk.

Convenience Net

For vehicles with a convenience net inside the trunk, it can be used to secure loose items.

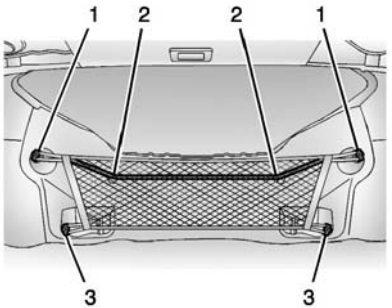

The upper (1) and lower (3) hooks on each side of the trunk opening are provided to attach the net.

Install the opening of the net at the top and over the two middle hooks (2).

✍ NOTES

Instruments and Controls

Controls

Steering Wheel Adjustment . . . 5-2
Steering Wheel Controls 5-2
Horn 5-3
Windshield Wiper/Washer 5-3
Compass 5-4
Clock 5-4
Power Outlets 5-5

Warning Lights, Gauges, and Indicators

Warning Lights, Gauges, and Indicators 5-6
Instrument Cluster 5-7
Speedometer 5-9
Odometer 5-9
Trip Odometer 5-9
Tachometer 5-9
Fuel Gauge 5-9
Engine Oil Pressure Gauge 5-10
Engine Oil Temperature Gauge 5-11
Engine Coolant Temperature Gauge 5-12
Transmission Temperature Gauge (Except ZL1) 5-13
Voltmeter Gauge 5-13
Safety Belt Reminders 5-14
Airbag Readiness Light 5-15
Passenger Airbag Status Indicator 5-15
Charging System Light 5-16
Malfunction Indicator Lamp 5-16
Brake System Warning Light 5-19
Antilock Brake System (ABS) Warning Light 5-20
Traction Off Light 5-20
Traction Control System (TCS)/StabiliTrak® Light 5-21
Traction Control System (TCS) OFF/StabiliTrak® OFF Light 5-21
Tire Pressure Light 5-22
Engine Oil Pressure Light 5-22
Immobilizer Light 5-22
High-Beam On Light 5-23
Front Fog Lamp Light 5-23
Taillamp Indicator Light 5-23
Cruise Control Light 5-23

Information Displays

Driver Information Center (DIC) 5-24
Head-Up Display (HUD) 5-28

Vehicle Messages

Vehicle Messages 5-32
Battery Voltage and Charging Messages 5-33
Brake System Messages 5-33
Compass Messages 5-33
Convertible Top Messages . . . 5-33
Cruise Control Messages 5-34
Door Ajar Messages 5-34
Engine Cooling System Messages 5-35
Engine Oil Messages 5-35
Engine Power Messages 5-36
Fuel System Messages 5-36
Key and Lock Messages 5-36
Lamp Messages 5-36
Object Detection System Messages 5-37
Ride Control System Messages 5-37
Airbag System Messages 5-40
Security Messages 5-40
Service Vehicle Messages . . . 5-40
Tire Messages 5-40

Transmission Messages 5-41
Vehicle Reminder Messages 5-41
Vehicle Speed Messages 5-42
Window Messages 5-42

Vehicle Personalization
Vehicle Personalization 5-42

Universal Remote System
Universal Remote System . . . 5-48
Universal Remote System Programming 5-48
Universal Remote System Operation 5-50

Controls

Steering Wheel Adjustment

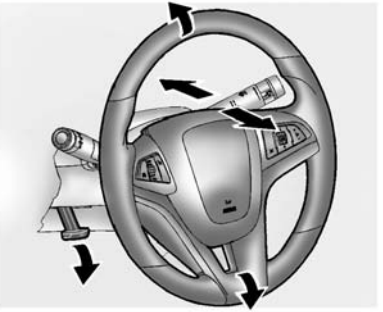

To adjust the steering wheel:

1. Pull the lever down.
2. Move the steering wheel up or down.
3. Pull or push the steering wheel closer or away from you.
4. Pull the lever up to lock the steering wheel in place.

Do not adjust the steering wheel while driving.

Steering Wheel Controls

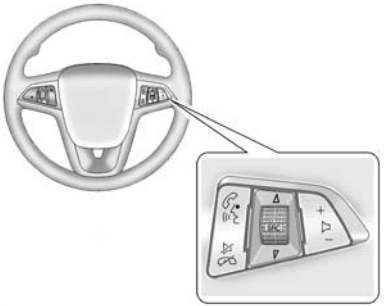

Some audio controls can be adjusted at the steering wheel.

/ (Press to Talk): If equipped with Bluetooth® or OnStar®, press to interact with those systems. See *Bluetooth (Voice Recognition) on page 7-25* or *Bluetooth (Infotainment Controls) on*

page 7-21 or *Bluetooth (Overview) on page 7-20* or *OnStar Overview on page 14-1*.

/ (Mute/End Call): If equipped with Bluetooth or OnStar, press to reject an incoming call or end a current call. Press to silence the vehicle speakers while using the infotainment system. Press again to turn the sound on.

SRC (Toggle Switch): Press to select an audio source.

Turn up or down to select the next or previous favorite radio station, CD, or MP3 track.

+ − (Volume): Press + or − to increase or decrease the volume.

Horn

Press on the steering wheel pad to sound the horn.

Windshield Wiper/Washer

The windshield wiper/washer lever is on the right side of the steering column. With the ignition in ACC/ACCESSORY or ON/RUN, move the windshield wiper lever to select the wiper speed.

HI: Use for fast wipes.

LO: Use for slow wipes.

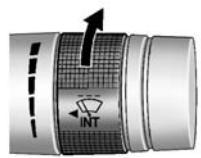

INT (Intermittent Wipes): Move the lever up to INT for intermittent wipes, then turn the INT band up for more frequent wipes or down for less frequent wipes.

OFF: Use to turn the wipers off.

(Mist): For a single wipe, briefly move the wiper lever down. For several wipes, hold the wiper lever down.

Clear snow and ice from the wiper blades and windshield before using them. If frozen to the windshield, carefully loosen or thaw them. Damaged blades should be replaced. See *Wiper Blade Replacement on page 10-43*.

Heavy snow or ice can overload the wiper motor.

Wiper Parking

If the ignition is turned to LOCK/OFF while the wipers are on LO, HI, or INT, they will immediately stop.

If the windshield wiper lever is then moved to off before the driver door is opened or within 10 minutes, the wipers will restart and move to the base of the windshield.

If the ignition is turned to LOCK/OFF while the wipers are performing wipes due to windshield washing, the wipers continue to run until they reach the base of the windshield.

↓ **(Windshield Washer):** Pull the windshield wiper lever toward you to spray windshield washer fluid and activate the wipers. The wipers will continue until the lever is released or the maximum wash time is reached. When the windshield wiper lever is released, additional wipes may occur depending on how long the windshield washer had been activated. See *Washer Fluid on page 10-37* for information on filling the windshield washer fluid reservoir.

⚠ Warning

In freezing weather, do not use the washer until the windshield is warmed. Otherwise the washer fluid can form ice on the windshield, blocking your vision.

Compass

The vehicle may have a compass display in the Driver Information Center (DIC). The compass receives its heading and other information from the Global Positioning System (GPS) antenna, StabiliTrak, and vehicle speed information.

Avoid covering the GPS antenna, located on the roof, for long periods of time with objects that may interfere with the antenna's ability to receive a satellite signal. The compass system is designed to operate for a certain number of miles or degrees of turn before needing a signal from the GPS satellites. When the compass display shows CAL, drive the vehicle for a short distance in an open area where it can receive a GPS signal. The compass system will automatically determine when the GPS signal is restored and provide a heading again.

Clock

The infotainment system controls are used to access the time and date settings through the menu system. The clock menu can only be used with the radio on while in ON/RUN or ACC/ACCESSORY.

Setting the Time and Date

1. Press the CONFIG button.
2. Select Time and Date.
3. Select Set Time or Set Date.
4. Turn the MENU/SELECT knob to adjust the highlighted value.
5. Press the MENU/SELECT knob to select the next value.

6. To save the time or date and return to the Time and Date menu, press the ⇦ BACK button at any time or press the MENU/SELECT knob after adjusting the minutes or year.

If auto timing is set, the time displayed on the clock may not update immediately when driving into a new time zone.

Setting the 12/24 Hour Format

1. Press the CONFIG button.
2. Select Time and Date.
3. Highlight 12 hr / 24 hr Format.
4. Press the MENU/SELECT knob to select the 12 hour or 24 hour display format.

Setting the Month & Day Format

1. Press the CONFIG button.
2. Select Time and Date.
3. Highlight Month & Day Format.
4. Press the MENU/SELECT knob to select MM/DD (month/day) or DD/MM (day/month).

Power Outlets

The vehicle has two accessory power outlets; one is below the climate control system and the other is inside the center console storage. They can be used to plug in electrical equipment, such as a cell phone or an MP3 player.

The accessory power outlets do not work when the key is removed from the ignition and the driver door is opened. This helps to preserve the battery life of the vehicle.

Certain power accessory plugs may not be compatible with the accessory power outlet and could overload vehicle and adapter fuses. If a problem is experienced, see your dealer.

When adding electrical equipment, be sure to follow the proper installation instructions included with the equipment. See *Add-On Electrical Equipment on page 9-61*.

⚠ Caution

Hanging heavy equipment from the power outlet can cause damage not covered by the vehicle warranty. The power outlets are designed for accessory power plugs only, such as cell phone charge cords.

Warning Lights, Gauges, and Indicators

Warning lights and gauges can signal that something is wrong before it becomes serious enough to cause an expensive repair or replacement. Paying attention to the warning lights and gauges could prevent injury.

Warning lights come on when there could be a problem with a vehicle function. Some warning lights come on briefly when the engine is started to indicate they are working.

Gauges can indicate when there could be a problem with a vehicle function. Often gauges and warning lights work together to indicate a problem with the vehicle.

When one of the warning lights comes on and stays on while driving, or when one of the gauges shows there may be a problem, check the section that explains what to do. Waiting to do repairs can be costly and even dangerous.

Instrument Cluster

V8 English Shown, V6, Metric, and Manual Transmission Similar

ZL1 English Shown, Z/28, Metric, and Manual Transmission Similar

Speedometer

The speedometer shows the vehicle's speed in either kilometers per hour (km/h) or miles per hour (mph).

Odometer

The odometer shows how far the vehicle has been driven, in either kilometers or miles.

Trip Odometer

The trip odometer shows how far the vehicle has been driven since the trip odometer was last reset.

The trip odometer is accessed and reset through the Driver Information Center (DIC). See *Driver Information Center (DIC) on page 5-24*.

Tachometer

The tachometer displays the engine speed in revolutions per minute (rpm).

⚠ Caution

If the engine is operated with the rpm's in the warning area at the high end of the tachometer, the vehicle could be damaged, and the damage would not be covered by the vehicle warranty. Do not operate the engine with the rpm's in the warning area.

Fuel Gauge

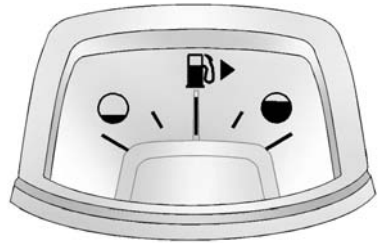

Metric

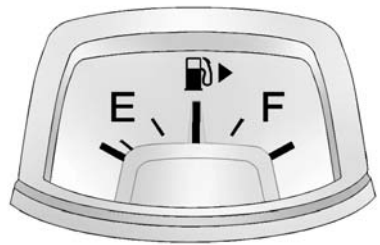

English

When the ignition is on, the fuel gauge shows about how much fuel the vehicle has left in the fuel tank.

An arrow on the fuel gauge shows the side of the vehicle on which the fuel door is located.

The gauge indicates empty before the vehicle is out of fuel, to show that the vehicle's fuel tank should be filled soon.

When the fuel tank is low on fuel, a FUEL LEVEL LOW message will appear on the Driver Information Center (DIC). For more information see *Fuel System Messages on page 5-36*.

Here are some situations that can occur with the fuel gauge. None of these indicate a problem with the fuel gauge.

- At the gas station, the fuel pump shuts off before the gauge reads full.
- It takes a little more or less fuel to fill up than the fuel gauge indicated. For example, the gauge may have indicated the tank was half full, but it actually took a little more or less than half the tank's capacity to fill the tank.
- The pointer on the fuel gauge is on empty when the ignition is off.

Engine Oil Pressure Gauge

Metric

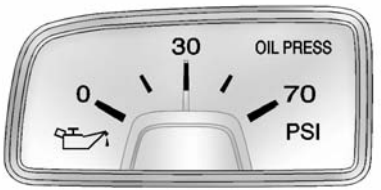

English

For vehicles with the oil pressure gauge, it is near the shift lever, and shows the engine oil pressure in kPa (kilopascals) or psi (pounds per square inch) when the engine is running.

Oil pressure may vary with engine speed, outside temperature, and oil viscosity, but readings above the low pressure zone indicate the normal operating range. When the oil pressure reaches the low pressure zone, a message appears in the Driver Information Center (DIC). See *Engine Oil Messages on page 5-35* and *Engine Oil on page 10-15*.

⚠ Caution

Lack of proper engine oil maintenance can damage the engine. Driving with the engine oil low can also damage the engine. The repairs would not be covered by the vehicle warranty.

(Continued)

Caution (Continued)

Check the oil level as soon as possible. Add oil if required, but if the oil level is within the operating range and the oil pressure is still low, have the vehicle serviced. Always follow the maintenance schedule for changing engine oil.

A reading in the low pressure zone can be caused by a dangerously low oil level or some other problem causing low oil pressure. Check the oil as soon as possible.

Engine Oil Temperature Gauge

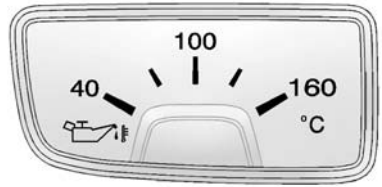

Metric

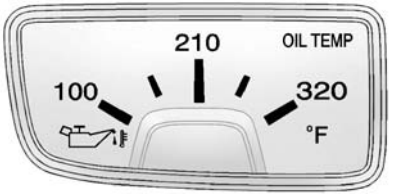

English

For vehicles with this gauge, it is near the shift lever and indicates engine oil temperature. If the gauge pointed moves to the higher end of the gauge, the engine oil temperature is operating hotter than normal. It is acceptable if this happens during aggressive driving or race track usage. The DIC will display a warning message if the engine oil temperature exceeds an acceptable level. See *Engine Oil Messages on page 5-35*.

Engine Coolant Temperature Gauge

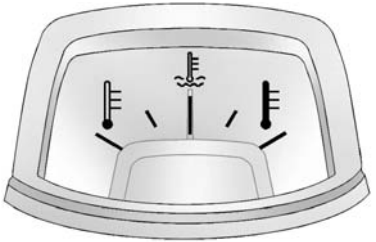

Metric

English

This gauge indicates the engine coolant temperature. If the gauge pointer moves to the H or the shaded area, the engine coolant is operating hotter than normal. It is acceptable if this happens during aggressive driving or race track usage. The DIC will display a warning message if the engine coolant temperature exceeds an acceptable level. See *Engine Cooling System Messages on page 5-35*.

Transmission Temperature Gauge (Except ZL1)

Metric

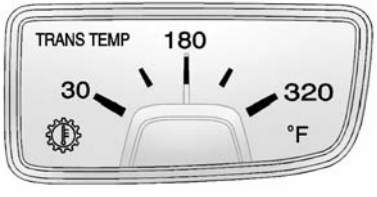

English

For vehicles with this gauge, it is near the shift lever, and shows the transmission oil temperature when the ignition is on. If the gauge is reading in the red area and/or a message appears in the Driver Information Center (DIC), the vehicle must be stopped and the cause checked. One possible cause is a low fluid level in the transmission.

For information on the DIC messages see *Transmission Messages on page 5-41*.

⚠ Caution

Do not drive the vehicle while the transmission fluid is overheating, or the transmission can be damaged. This could lead to costly repairs that would not be covered by the warranty.

Voltmeter Gauge

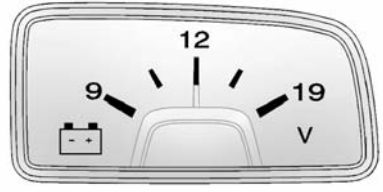

Metric

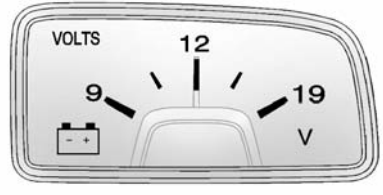

English

For vehicles with this gauge, it is near the shift lever, and shows the battery's state of charge in DC volts.

When the engine is running and the ignition is on, this gauge shows the condition of the charging system.

The vehicle's charging system regulates voltage based on the state of charge of the battery. It is normal for the voltmeter to fluctuate. Readings between the low and high warning zones indicate the normal operating range.

Readings in the low warning zone can occur when a large number of electrical accessories are operating in the vehicle and the engine is left idling for an extended period.

If there is a problem with the battery charging system, a message appears in the Driver Information Center (DIC) and/or the charging system light comes on. See *Battery Voltage and Charging Messages on page 5-33* and *Charging System Light on page 5-16*.

However, readings in either warning zone can indicate a possible problem in the electrical system. Have the vehicle serviced as soon as possible.

Safety Belt Reminders

Driver Safety Belt Reminder Light

There is a driver safety belt reminder light on the instrument cluster.

When the vehicle is started, this light flashes and a chime may come on to remind the driver to fasten their safety belt. Then the light stays on solid until the belt is buckled. This cycle may continue several times if the driver remains or becomes unbuckled while the vehicle is moving.

If the driver safety belt is buckled, neither the light nor the chime comes on.

Passenger Safety Belt Reminder Light

There is a passenger safety belt reminder light near the passenger airbag status indicator. See *Passenger Sensing System on page 3-22*.

When the vehicle is started, this light flashes and a chime may come on to remind passengers to fasten their safety belt. Then the light stays on solid until the belt is buckled. This cycle continues several times if the passenger remains or becomes unbuckled while the vehicle is moving.

If the passenger safety belt is buckled, neither the chime nor the light comes on.

The front passenger safety belt reminder light and chime may turn on if an object is put on the seat such as a briefcase, handbag, grocery bag, laptop, or other electronic device. To turn off the reminder light and/or chime, remove the object from the seat or buckle the safety belt.

Airbag Readiness Light

This light shows if there is an electrical problem with the airbag system. The system check includes the airbag sensor(s), passenger sensing system, the pretensioners, the airbag modules, the wiring, and the crash sensing and diagnostic module. For more information on the airbag system, see *Airbag System on page 3-15*.

The airbag readiness light comes on for several seconds when the vehicle is started. If the light does not come on then, have it fixed immediately.

⚠ Warning

If the airbag readiness light stays on after the vehicle is started or comes on while driving, it means the airbag system might not be working properly. The airbags in the vehicle might not inflate in a crash, or they could even inflate without a crash. To help avoid injury, have the vehicle serviced right away.

If there is a problem with the airbag system, a Driver Information Center (DIC) message may also come on. See *Airbag System Messages on page 5-40*.

Passenger Airbag Status Indicator

The vehicle has a passenger sensing system. See *Passenger Sensing System on page 3-22* for important safety information. The overhead console has a passenger airbag status indicator.

United States

Canada and Mexico

When the vehicle is started, the passenger airbag status indicator will light ON and OFF, or the symbol for on and off, for several seconds

as a system check. Then, after several seconds, the status indicator will light either ON or OFF, or either the on or off symbol, to let you know the status of the front outboard passenger frontal airbag.

If the word ON or the on symbol is lit on the passenger airbag status indicator, it means that the front outboard passenger frontal airbag is allowed to inflate.

If the word OFF or the off symbol is lit on the passenger airbag status indicator, it means that the passenger sensing system has turned off the front outboard passenger frontal airbag.

If, after several seconds, both status indicator lights remain on, or if there are no lights at all, there may be a problem with the lights or the passenger sensing system. See your dealer for service.

⚠ Warning

If the airbag readiness light ever comes on and stays on, it means that something may be wrong with the airbag system. To help avoid injury to yourself or others, have the vehicle serviced right away. See *Airbag Readiness Light on page 5-15* for more information, including important safety information.

Charging System Light

The charging system light comes on briefly when the ignition is turned on, but the engine is not running, as a check to show the light is working. It should go out when the engine is started.

If the light stays on or comes on while driving, there may be a problem with the electrical charging system. Have it checked by your dealer. Driving while this light is on could drain the battery.

When this light comes on, the Driver Information Center (DIC) also displays a message.

See *Battery Voltage and Charging Messages on page 5-33*.

If a short distance must be driven with the light on, be sure to turn off all accessories, such as the radio and air conditioner.

Malfunction Indicator Lamp

A computer system called OBD II (On-Board Diagnostics-Second Generation) monitors the operation of the vehicle to ensure emissions are at acceptable levels, helping to

maintain a clean environment. The malfunction indicator lamp comes on when the vehicle is placed in ON/RUN as a check to show it is working. If it does not, have the vehicle serviced by your dealer. See *Ignition Positions on page 9-19* for more information.

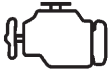

If the malfunction indicator lamp comes on while the engine is running, this indicates that the OBD II system has detected a problem and diagnosis and service might be required.

Malfunctions often are indicated by the system before any problem is apparent. Being aware of the light can prevent more serious damage to the vehicle. This system also assists the service technician in correctly diagnosing any malfunction.

⚠ Caution

If the vehicle is continually driven with this light on, the emission controls might not work as well, the vehicle fuel economy might not be as good, and the engine might not run as smoothly. This could lead to costly repairs that might not be covered by the vehicle warranty.

⚠ Caution

Modifications made to the engine, transmission, exhaust, intake, or fuel system of the vehicle or the replacement of the original tires with other than those of the same Tire Performance Criteria

(Continued)

Caution (Continued)

(TPC) can affect the vehicle's emission controls and can cause this light to come on. Modifications to these systems could lead to costly repairs not covered by the vehicle warranty. This could also result in a failure to pass a required Emission Inspection/Maintenance test. See *Accessories and Modifications on page 10-3*.

This light comes on during a malfunction in one of two ways:

Light Flashing: A misfire condition has been detected. A misfire increases vehicle emissions and could damage the emission control system on the vehicle. Diagnosis and service might be required.

To prevent more serious damage to the vehicle:

- Reduce vehicle speed.

- Avoid hard accelerations.
- Avoid steep uphill grades.

If the light continues to flash, find a safe place to stop and park the vehicle. Turn the vehicle off, wait at least 10 seconds, and restart the engine. If the light is still flashing, follow the previous steps and see your dealer for service as soon as possible.

Light On Steady: An emission control system malfunction has been detected on the vehicle. Diagnosis and service might be required.

The following may correct an emission control system malfunction:

- Check that the fuel cap is fully installed. See *Filling the Tank on page 9-53*. The diagnostic system can determine if the fuel cap has been left off or improperly installed. A loose or missing fuel cap allows fuel to evaporate into the atmosphere. A few driving trips with the cap properly installed should turn the light off.
- Check that good quality fuel is used. Poor fuel quality causes the engine not to run as efficiently as designed and may cause stalling after start-up, stalling when the vehicle is changed into gear, misfiring, hesitation on acceleration, or stumbling on acceleration. These conditions might go away once the engine is warmed up.

If one or more of these conditions occurs, change the fuel brand used. It may require at least one full tank of the proper fuel to turn the light off.

See *Fuel on page 9-51*.

If none of the above have made the light turn off, your dealer can check the vehicle. The dealer has the proper test equipment and diagnostic tools to fix any mechanical or electrical problems that might have developed.

Emissions Inspection and Maintenance Programs

Depending on where you live, your vehicle may be required to participate in an emission control system inspection and maintenance program. For the inspection, the emission system test equipment will likely connect to the vehicle's Data Link Connector (DLC).

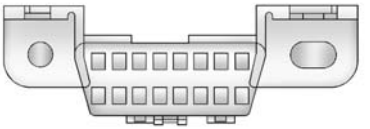

The DLC is under the instrument panel to the left of the steering wheel. See your dealer if assistance is needed.

The vehicle may not pass inspection if:

- The malfunction indicator lamp is on with the engine running, or if the light does not come on when

the ignition is turned to ON/RUN while the engine is off. See your dealer for assistance in verifying proper operation of the malfunction indicator lamp.

- The OBD II (On-Board Diagnostics) system determines that critical emission control systems have not been completely diagnosed. The vehicle would be considered not ready for inspection. This can happen if the 12-volt battery has recently been replaced or run down. The diagnostic system is designed to evaluate critical emission control systems during normal driving. This can take several days of routine driving. If this has been done and the vehicle still does not pass the inspection for lack of OBD II system readiness, your dealer can prepare the vehicle for inspection.

Brake System Warning Light

The vehicle brake system consists of two hydraulic circuits. If one circuit is not working, the remaining circuit can still work to stop the vehicle. For normal braking performance, both circuits need to be working

If the warning light comes on, there is a brake problem. Have the brake system inspected right away.

BRAKE

Metric **English**

If the vehicle has antilock brakes, this light should come on when the key is turned to START. If it does not come on, have it fixed so it will be ready to warn if there is a problem.

When the ignition is on, the brake system warning light also comes on when the parking brake is set. The light stays on if the parking brake does not fully release. If it stays on after the parking brake is fully released, it means the vehicle has a brake problem.

If, while driving, the light comes on and a brake message comes on the Driver Information Center (DIC), pull off the road and stop carefully. The pedal could be harder to push or the pedal can go closer to the floor. It could take longer to stop. If the light is still on, have the vehicle towed for service. See *Antilock Brake System (ABS) Warning Light on page 5-20* and *Towing the Vehicle on page 10-99*.

⚠ Warning

The brake system might not be working properly if the brake system warning light is on.

(Continued)

Warning (Continued)

Driving with the brake system warning light on can lead to a crash. If the light is still on after the vehicle has been pulled off the road and carefully stopped, have the vehicle towed for service.

The brake message remains on until the MENU button is pressed. The brake light remains until the problem is fixed. See *Brake System Messages on page 5-33* for more information.

Antilock Brake System (ABS) Warning Light

This light comes on briefly when the engine is started.

If the light does not come on, have it fixed so it will be ready to warn if there is a problem.

If the light comes on while driving, stop as soon as it is safely possible and turn off the vehicle. Then start the engine again to reset the system. If the ABS light stays on, or comes on again while driving, the vehicle needs service. A chime may also sound when the light comes on steady.

If the ABS light is the only light on, the vehicle has regular brakes, but the antilock brakes are not functioning.

If both the ABS and the brake system warning light are on, the vehicle's antilock brakes are not functioning and there is a problem with the regular brakes. See your dealer for service.

See *Brake System Warning Light on page 5-19* and *Brake System Messages on page 5-33*.

Traction Off Light

This light comes on briefly while starting the engine. If it does not, have the vehicle serviced by your dealer. If the system is working normally, the indicator light then turns off.

The traction off light comes on when the Traction Control System (TCS) has been turned off by pressing and releasing the TCS/StabiliTrak button.

This light and the StabiliTrak OFF light come on when StabiliTrak is turned off.

If the TCS is off, wheel spin is not limited. Adjust driving accordingly.

See *Traction Control/Electronic Stability Control on page 9-38*.

Traction Control System (TCS)/StabiliTrak® Light

This light comes on briefly when the engine is started.

If the light does not come on, have the vehicle serviced by your dealer. If the system is working normally, the indicator light turns off.

If the light is on and not flashing, the TCS and potentially the StabiliTrak system have been disabled. A DIC message may display. Check the DIC messages to determine which feature(s) is no longer functioning and whether the vehicle requires service.

If the indicator/warning light is on and flashing, the TCS and/or the StabiliTrak system is actively working.

See *Traction Control/Electronic Stability Control on page 9-38*.

Traction Control System (TCS) OFF/StabiliTrak® OFF Light

This light should come on briefly as the engine is started. If it does not come on, have the vehicle serviced by your dealer.

This light comes on when the StabiliTrak system is turned off. If the TCS is off, wheel spin is not limited. If the StabiliTrak system is off, the system does not assist in controlling the vehicle. Turn on the TCS and the StabiliTrak system and the warning light turns off.

For SS models, when both TCS and StabiliTrak lights are on, the vehicle is in Competitive Mode. A warning also appears on the DIC for StabiliTrak Competitive Mode. See *Ride Control System Messages on page 5-37*.

For ZL1, when both TCS and StabiliTrak lights are on, the vehicle is in Performance Traction Management or both TCS and StabiliTrak systems are disabled.

See *Traction Control/Electronic Stability Control on page 9-38* and *Competitive Driving Mode on page 9-40*.

Tire Pressure Light

For vehicles with the Tire Pressure Monitor System (TPMS), this light comes on briefly when the engine is started. It provides information about tire pressures and the TPMS.

When the Light Is On Steady

This indicates that one or more of the tires are significantly underinflated.

A Driver Information Center (DIC) tire pressure message may also display. See *Tire Messages on page 5-40*. Stop as soon as possible, and inflate the tires to the pressure value shown on the Tire and Loading Information label. See *Tire Pressure on page 10-65*.

When the Light Flashes First and Then Is On Steady

If the light flashes for about a minute and then stays on, there may be a problem with the TPMS. If the problem is not corrected, the light will come on at every ignition cycle. See *Tire Pressure Monitor Operation on page 10-68*.

Engine Oil Pressure Light

⚠ Caution

Lack of proper engine oil maintenance can damage the engine. Driving with the engine oil low can also damage the engine. The repairs would not be covered by the vehicle warranty. Check the oil level as soon as possible. Add oil if required, but if the oil level is within the operating range and the oil pressure is still low, have the vehicle serviced. Always follow the maintenance schedule for changing engine oil.

This light should come on briefly as the engine is started. If it does not come on, have the vehicle serviced by your dealer.

If the light comes on and stays on, it means that oil is not flowing through the engine properly. The vehicle could be low on oil and might have some other system problem. See your dealer.

Immobilizer Light

The immobilizer light should come on briefly as the engine is started. If it does not come on, have the vehicle serviced by your dealer. If the system is working normally, the indicator light turns off.

If the light stays on and the engine does not start, there could be a problem with the immobilizer system. See *Immobilizer Operation on page 2-12*.

High-Beam On Light

This light comes on when the high-beam headlamps are in use.

See *Headlamp High/Low-Beam Changer on page 6-2*.

Front Fog Lamp Light

The front fog lamp light comes on when the fog lamps are in use.

The light goes out when the fog lamps are turned off. See *Front Fog Lamps on page 6-5*.

Taillamp Indicator Light

This light comes on when the taillamps are in use.

Cruise Control Light

The cruise control light is white when the cruise control is on and ready, and turns green when the cruise control is set and active.

The light goes out when the cruise control is turned off. See *Cruise Control on page 9-45*.

Information Displays

Driver Information Center (DIC)

The DIC displays information about your vehicle. It also displays warning messages if a system problem is detected. See *Vehicle Messages on page 5-32*. All messages appear in the DIC display in the center of the instrument cluster.

The vehicle may also have features that can be customized through the controls on the radio. See *Vehicle Personalization on page 5-42*.

DIC Operation and Displays

The DIC has different displays which can be accessed by using the DIC buttons on the turn signal lever on the left side of the steering wheel. The DIC displays trip, fuel, vehicle system information, and warning messages if a system problem is detected.

The bottom of the DIC display shows what position the shift lever is in (automatic transmission only), the odometer, and the direction the vehicle is driving.

DIC Buttons

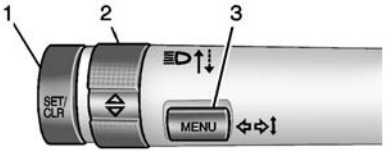

1. **SET/CLR (Set/Clear):** Press to set, or press and hold to clear, the menu item displayed.
2. △ / ▽ **(Band):** Use the band to scroll through the items in each menu.
3. **MENU:** Press this button to get to the Trip/Fuel Menu and the Vehicle Information Menu. Some models may also have a Performance Menu. This button is also used to return to or exit the last screen displayed on the DIC.

Trip/Fuel Menu Items

Press the MENU button on the turn signal lever until Trip/Fuel Information Menu is displayed. Use the band to scroll through the following menu items:

- Digital Speedometer
- Trip 1
- Trip 2
- Fuel Range
- Average Fuel Economy
- Average Vehicle Speed
- Turn-by-Turn
- Blank

Digital Speedometer

The speedometer shows how fast the vehicle is moving in either kilometers per hour (km/h) or miles per hour (mph). The speedometer cannot be reset.

Trip 1 and Trip 2

The Trip display shows the current distance traveled, in either kilometers (km) or miles (mi), since the last reset for the trip odometer. The trip odometer can be reset to zero by pressing the trip reset stem or the SET/CLR button while the trip odometer display is showing.

Fuel Range

The Fuel Range display shows the approximate distance the vehicle can be driven without refueling. The fuel range estimate is based on an average of the vehicle's fuel economy over recent driving history and the amount of fuel remaining in the fuel tank. Fuel range cannot be reset.

Average Fuel Economy

The Average Fuel Economy display shows the approximate average liters per 100 kilometers (L/100 km) or miles per gallon (mpg). This number reflects only the approximate average fuel economy that the vehicle has right now, and will change as driving conditions change. This number is calculated based on the number of L/100 km (mpg) recorded since the last time this menu item was reset. The fuel economy can be reset by pressing the SET/CLR button while the Average Fuel Economy display is showing.

Average Vehicle Speed

The Average Vehicle Speed display shows the average speed of the vehicle in kilometers per hour (km/h) or miles per hour (mph). This average is calculated based on the various vehicle speeds recorded since the last reset of this value. The average speed can be reset by pressing the SET/CLR button while the Average Vehicle Speed display is showing.

Turn-by-Turn

This display is used for the OnStar Turn-by-Turn Navigation. See *OnStar Overview on page 14-1*.

Blank

This display shows no information.

Vehicle Information Menu Items

Press the MENU button on the turn signal lever until Vehicle Information Menu is displayed. Use the band to scroll through the following menu items:

- Unit
- Tire Pressure
- Remaining Oil Life
- Coolant Temperature
- Battery Voltage
- Speed Warning

Unit

Move the band up or down to switch between US or Metric when the Unit display is active. Press SET/CLR to confirm the setting. This will change the displays on the cluster and DIC to either English (US) or metric measurements.

Tire Pressure

The display will show a vehicle with the approximate pressures of all four tires. Tire pressure is displayed in either kilopascal (kPa) or in pounds per square inch (psi). See *Tire Pressure Monitor System on page 10-67* and *Tire Pressure Monitor Operation on page 10-68*.

Remaining Oil Life

This display shows an estimate of the oil's remaining useful life. If REMAINING OIL LIFE 99% is displayed, that means 99% of the current oil life remains.

When the remaining oil life is low, the CHANGE ENGINE OIL SOON message will appear on the display. See *Engine Oil Messages on page 5-35*. The oil should be changed as soon as possible. See *Engine Oil on page 10-15*. In addition to the engine oil life system monitoring the oil life, additional maintenance is recommended in the Maintenance Schedule. See *Maintenance Schedule on page 11-2*.

Remember, the Oil Life display must be reset after each oil change. It will not reset itself. Also, be careful not to reset the Oil Life display accidentally at any time other than when the oil has just been changed. It cannot be reset accurately until the next oil change. To reset the engine oil life system press the SET/CLR button while the Oil Life display is active. See *Engine Oil Life System on page 10-19*.

Coolant Temperature

This display, available on some vehicles, shows the temperature of the engine cooling system fluid in either degrees Celsius (°C) or degrees Fahrenheit (°F).

Battery Voltage

This display, available on some vehicles, shows the current battery voltage. If the voltage is in the normal range, the value will display. For example, the display may read Battery Voltage 15.0 Volts. The vehicle's charging system regulates voltage based on the state of the battery. The battery voltage can fluctuate while viewing this information on the DIC. This is normal. See *Charging System Light on page 5-16*. If there is a problem with the battery charging system, the DIC will display a message. See *Battery Voltage and Charging Messages on page 5-33*.

Speed Warning

Speed Warning allows the driver to set a speed that they do not want to exceed. To set the Speed Warning, press SET/CLR when Speed Warning is displayed.

Performance Menu

Some vehicles may have a Performance Menu. Press the MENU button on the turn signal lever until Performance Menu is displayed. Use the band to scroll through the following menu items:

- Lap Timer
- Coolant Temperature and Battery Voltage
- Oil Temperature and Oil Pressure
- Acceleration

Lap Timer

The Lap Timer display shows total time, lap times, top speed, average speed, and average time when active.

While in this display, press SET/CLR to activate the lap timer function. While timer is active, press MENU to store the current lap time and start timer for a new lap. Press SET/CLR to pause or resume the lap timer. Press and hold SET/CLR to clear and exit the lap timer function.

Coolant Temperature and Battery Voltage

The coolant temperature display shows the temperature of the engine cooling system fluid in either degrees Celsius (°C) or degrees Fahrenheit (°F).

The battery voltage display shows the current battery voltage. The vehicle's charging system regulates voltage based on the state of the battery. The battery voltage can fluctuate while viewing this information on the DIC. This is normal. See *Charging System Light on page 5-16*. If there is a problem with the battery charging system, the DIC will display a message. See *Battery Voltage and Charging Messages on page 5-33*.

Oil Temperature and Oil Pressure

The oil temperature display shows the temperature of the engine oil in either Celsius (C) or degrees Fahrenheit (F). The oil pressure display shows the current oil pressure. Oil pressure varies with engine load and RPM. If there is an issue with oil pressure a message will display on the DIC.

Acceleration

Longitudinal and lateral accelerations are displayed showing the vehicle's current acceleration levels.

Compass

The vehicle may have a compass display in the Driver Information Center (DIC). See *Compass on page 5-4*.

Head-Up Display (HUD)

⚠ Warning

If the HUD image is too bright or too high in your field of view, it may take you more time to see things you need to see when it is dark outside. Be sure to keep the HUD image dim and placed low in your field of view.

If equipped with HUD, some information concerning the operation of the vehicle is projected onto the windshield. This includes but is not limited to the speedometer reading, rpm reading, transmission position, outside air temperature, compass heading, and a brief display of the current radio station, including SiriusXM information or CD track. It will also display Turn-by-Turn Navigation information if the vehicle has OnStar®. The images are projected through the HUD lens on the driver side of the instrument panel.

⚠ Caution

If you try to use the HUD image as a parking aid, you may misjudge the distance and damage your vehicle. Do not use the HUD image as a parking aid.

The tap shift gear will appear on the HUD if the vehicle has tap shift and it is active. The shift timing lights and a lateral acceleration (G-Force) indicator may also appear.

The language of the HUD information displayed can be changed. The speedometer reading and other numerical values can be displayed in either English or metric units.

The language selection is changed through the radio and the units of measurement selection is changed through the trip computer in the Driver Information Center (DIC). See the Infotainment Manual and *Driver Information Center (DIC) on page 5-24*.

HUD Display on the Vehicle Windshield

The HUD information appears as an image focused out toward the front of the vehicle.

When the ignition key is turned to ON/RUN, the HUD will display when ready.

The following indicator lights come on in the instrument cluster when activated and may also appear on the HUD:

- Turn Signal Indicators
- High-Beam Indicator Symbol

The HUD also temporarily displays the following messages on vehicles with these systems, when they are active:

- Check Tire Pressure
- Cruise Set To
- Fuel Level Low
- Speed Limited To
- Traction Control Active
- Stabilitrak Active
- Park Distance Unavailable
- Gap Alert Off

When the HUD is on, the speedometer reading is continually displayed. The current radio station or CD track number may display for a short period of time after the radio or CD track status changes. This may happen whenever radio information is changed. The speedometer size is reduced when radio, CD information, or warnings are displayed on the HUD.

When the phone feature is activated, the HUD will briefly display phone information, if available.

The HUD control is to the right of the steering wheel.

To adjust the HUD image so that items are properly displayed:

1. Adjust the driver seat to a comfortable position.
2. Start the engine.
3. Adjust the HUD controls.

Use the following settings to adjust the HUD.

OFF: Turn the HUD dimming knob fully counterclockwise until the HUD display turns off.

Brightness: Turn the dimming knob clockwise or counterclockwise to brighten or dim the display. The HUD image will automatically dim and brighten to compensate for outside lighting. The HUD brightness control can also be adjusted as needed. The HUD image can temporarily light up depending on the angle and position of the sunlight on the HUD display. This is normal. Polarized sunglasses could make the HUD image harder to see.

∧ **(Up):** or ∨ **(Down):** Press the up or down arrows to center the HUD image in your view. The HUD image can only be adjusted up and down, not side to side.

PAGE: Press to select the display formats. Release the PAGE button when the format number with the desired display is shown on the HUD. If vehicle messages are displayed, pressing PAGE may clear the message.

The four formats are as follows:

English

Metric

Format One: This display gives the speedometer reading (in English or metric units), turn signal indication, high-beam indication, transmission positions (for automatic transmission vehicles only), outside air temperature, speed alert and compass heading.

English

Metric

Format Two: This display includes the information in Format One without the transmission information, the outside air temperature, speed alert and compass heading.

English

Metric

Format Three: This display includes the information in Format One along with a circular tachometer, but without outside air temperature and compass heading.

English

Metric

Format Four: This display gives the speedometer reading (in English or metric units), transmission positions (for automatic transmission vehicles only), Shift Timing Light Position and lateral acceleration (G) indicators. The radio, CD, navigation, and phone information do not appear in the Format Four HUD display.

The shift timing lights at the top of the display will appear with increases in engine rpm. See *Automatic Transmission on page 9-28* or *Manual Transmission on page 9-34*.

All formats, except Format Four, will show Turn-by-Turn Navigation information and provide details about the next driving maneuver to be made.

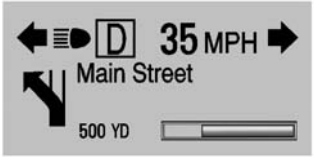

English

Metric

When you near your destination, the HUD will display a distance bar that will empty the closer you get to your destination. All navigation information is provided to the HUD by the OnStar service, for vehicles with this feature.

Care of the HUD

Clean the inside of the windshield as needed to remove any dirt or film that could reduce the sharpness or clarity of the HUD image.

Clean the HUD lens with a soft cloth sprayed with glass cleaner. Wipe the lens gently, then dry it.

If You Cannot See the HUD Image When the Ignition Is On

Check that:

- Nothing Is covering the HUD lens.
- HUD brightness is not too dim or too bright.
- HUD is adjusted to the proper height.
- Polarized sunglasses are not worn.
- Windshield and HUD lens are clean.

If the HUD image is not correct, contact your dealer.

The windshield is part of the HUD system. See *Windshield Replacement on page 10-44*.

Vehicle Messages

Messages displayed on the DIC indicate the status of the vehicle or some action that may be needed to correct a condition. Multiple messages may display one after the other.

The messages that do not require immediate action can be acknowledged and cleared by pressing SET/CLR. The messages that require immediate action cannot be cleared until that action is performed. All messages should be taken seriously and clearing the messages does not correct the problem.

The following are some of the vehicle messages that may be displayed depending on your vehicle content.

Battery Voltage and Charging Messages

BATTERY SAVER ACTIVE

This message displays when the vehicle has detected that the battery voltage is dropping beyond a reasonable point. The battery saver system starts reducing features of the vehicle that may be noticed. At the point that features are disabled, this message displays. Turn off unnecessary accessories to allow the battery to recharge.

LOW BATTERY

This message is displayed when the battery voltage is low. See *Battery on page 10-41*.

SERVICE BATTERY CHARGING SYSTEM

This message is displayed when there is a fault in the battery charging system. Take the vehicle to your dealer for service.

Brake System Messages

BRAKE FLUID LOW

This message is displayed when the brake fluid level is low; see *Brake Fluid on page 10-39*.

CHANGE BRAKE PADS (Z/28 Only)

This message is displayed when the brake pads are worn.

HILL START ASSIST ACTIVE

This message is displayed when Hill Start Assist (HSA) is preventing the vehicle from rolling while driving off on a grade. See *Hill Start Assist (HSA) on page 9-38*.

RELEASE PARKING BRAKE

This message is displayed as a reminder that the parking brake is on. Release it before you attempt to drive.

Compass Messages

CAL

This message is displayed when the compass needs to be calibrated. See *Compass on page 5-4*.

– –

Dashes will be displayed if the compass needs service. See your dealer for service.

Convertible Top Messages

BATTERY VOLTAGE TOO LOW – TOP DISABLED

This message displays when the battery voltage is too low to operate the convertible top.

EXTEND CARGO SHADE TO OPERATE

This message displays if the rear trunk partition is not extended and engaged.

CLOSE TRUNK TO OPERATE TOP

This message displays if the trunk is open while you are trying to operate the convertible top. Make sure the trunk is closed before operating the convertible top. See *Convertible Top on page 2-19*.

COMPLETE TOP MOTION TO OPEN TRUNK

This message displays if attempting to open the trunk before the top has been fully opened or closed.

REDUCE VEHICLE SPEED TO OPERATE TOP

This message is displayed when the vehicle is moving too fast to safely operate the convertible top. Reduce the vehicle speed.

TEMPERATURE TOO LOW – TOP DISABLED

This message displays and a sound will be heard when the power convertible top button is pressed and the power convertible top pump motor temperature is below 0°C (32° F). Wait for the power convertible top pump motor to warm up before using the power convertible top.

TOP NOT SECURE

This message displays when the power convertible top is closed without the convertible top front latch engaged or when the folding top is not fully stowed. Press and hold the convertible top button in the open direction until a beep is heard or close the top and engage the latch.

TOP SYSTEM OVERHEATED, PLEASE WAIT

This message displays and a sound will be heard when the power convertible top button is pressed and the power convertible top pump motor is overheated. Wait for the power convertible top pump motor to cool down before using the power convertible top.

UNLATCH TOP

This message displays and a sound will be heard if you try to lower the convertible top without first releasing the front latch. See *Convertible Top on page 2-19*.

Cruise Control Messages

CRUISE SET TO XXX

This message displays when the cruise control is set and shows the speed it was set to. See *Cruise Control on page 9-45*.

Door Ajar Messages

DRIVER DOOR OPEN

This message will display when the driver door is open. Close the door completely.

HOOD OPEN

This message will display when the hood is open. Close the hood completely.

PASSENGER DOOR OPEN

This message will display when the passenger door is open. Close the door completely.

TRUNK OPEN

This message will display when the trunk is open. Close the trunk completely.

Engine Cooling System Messages

A/C OFF DUE TO HIGH ENGINE TEMP

This message displays when the engine coolant becomes hotter than the normal operating temperature. To avoid added strain on a hot engine, the air conditioning compressor automatically turns off. When the coolant temperature returns to normal, the air conditioning compressor turns back on. You can continue to drive the vehicle. If this message continues to appear, have the system repaired by your dealer as soon as possible to avoid damage to the engine.

COOLANT LEVEL LOW ADD COOLANT

This message will display if the coolant is low. See *Engine Coolant on page 10-30*.

ENGINE OVERHEATED — IDLE ENGINE

This message displays when the engine coolant temperature is too hot. Stop and allow the vehicle to idle until it cools down.

ENGINE OVERHEATED — STOP ENGINE

This message displays and a continuous chime sounds if the engine cooling system reaches unsafe temperatures for operation. Stop and turn off the vehicle as soon as it is safe to do so to avoid severe damage. This message clears when the engine has cooled to a safe operating temperature.

Engine Oil Messages

CHANGE ENGINE OIL SOON

This message displays when the engine oil needs to be changed. When you change the engine oil, be sure to reset the oil life system. See *Engine Oil Life System on page 10-19*, *Driver Information Center (DIC) on page 5-24*, *Engine Oil on page 10-15*, and *Maintenance Schedule on page 11-2*.

ENGINE OIL HOT, IDLE ENGINE

This message displays when the engine oil temperature is too hot. Stop and allow the vehicle to idle until it cools down.

ENGINE OIL LOW — ADD OIL

On some vehicles, this message displays when the engine oil level may be too low. Check the oil level

before filling to the recommended level. If the oil is not low and this message remains on, take the vehicle to your dealer for service. See *Engine Oil on page 10-15*.

OIL PRESSURE LOW — STOP ENGINE

This message displays if low oil pressure levels occur. Stop the vehicle as soon as safely possible and do not operate it until the cause of the low oil pressure has been corrected. Check the oil as soon as possible and have the vehicle serviced by your dealer.

Engine Power Messages

ENGINE POWER IS REDUCED

This message displays when the vehicle's engine power is reduced. Reduced engine power can affect the vehicle's ability to accelerate. If this message is on, but there is no reduction in performance, proceed to your destination. The performance may be reduced the next time the vehicle is driven. The vehicle may be driven at a reduced speed while this message is on, but maximum acceleration and speed may be reduced. Anytime this message stays on, the vehicle should be taken to your dealer for service as soon as possible.

Fuel System Messages

FUEL LEVEL LOW

This message displays when the vehicle is low on fuel. Refuel as soon as possible.

TIGHTEN GAS CAP

This message displays when the fuel cap is not on tight. Tighten the fuel cap.

Key and Lock Messages

NUMBER OF KEYS PROGRAMMED

This message displays when programming new keys to the vehicle.

REPLACE BATTERY IN REMOTE KEY

This message displays when the battery in the Remote Keyless Entry (RKE) transmitter needs to be replaced.

Lamp Messages

AUTOMATIC LIGHT CONTROL ON

This message is displayed when the automatic light control has been turned on. See *Automatic Headlamp System on page 6-3*.

AUTOMATIC LIGHT CONTROL OFF

This message is displayed when the automatic light control has been turned off. See *Automatic Headlamp System on page 6-3*.

LEFT FRONT TURN INDICATOR FAILURE

This message is displayed if the turn signal bulb needs to be replaced. See *Headlamps, Front Turn Signal and Parking Lamps (Uplevel Vehicle) on page 10-45* or *Headlamps, Front Turn Signal and Parking Lamps (Base Vehicle) on page 10-46* and *Replacement Bulbs on page 10-48*.

LEFT REAR TURN INDICATOR FAILURE

This message is displayed if the turn signal bulb needs to be replaced. See *Bulb Replacement on page 10-44*.

RIGHT FRONT TURN INDICATOR FAILURE

This message is displayed if the turn signal bulb needs to be replaced. See *Headlamps, Front Turn Signal and Parking Lamps (Uplevel Vehicle) on page 10-45* or *Headlamps, Front Turn Signal and Parking Lamps (Base Vehicle) on page 10-46* and *Replacement Bulbs on page 10-48*.

RIGHT REAR TURN INDICATOR FAILURE

This message is displayed if the turn signal bulb needs to be replaced. See *Bulb Replacement on page 10-44*.

TURN SIGNAL ON

This message is displayed if the turn signal has been left on. Turn off the turn signal.

Object Detection System Messages

PARK ASSIST OFF

This message displays when the Rear Parking Assist (RPA) system has been turned off or when there is a temporary condition causing the system to be disabled. See *Parking Assist on page 9-48*.

SERVICE PARK ASSIST

This message displays if there is a problem with the Rear Parking Assist (RPA) system. Do not use this system to help you park. See *Parking Assist on page 9-48*.

Ride Control System Messages

PERF TRACTION 1 – WET ACTIVE HANDLING ON CHASSIS MODE TOUR (ZL1 Coupe and Z/28 Only)

This message displays when this Performance Traction Management (PTM) mode is selected. The TCS and StabiliTrak OFF cluster lights will also be on when this mode is selected. Once this message is acknowledged, PTM1 – WET ESC = ON displays on the bottom of the digital speed page. Launch Control is available when this mode is selected. In this mode, the Traction Control and Active Handling System are available but intended for use

on wet race track conditions. Adjust your driving accordingly. See "Performance Traction Management (PTM) (ZL1 Coupe and Z/28 Only)" and "Launch Control (V8 with Manual Transmissions except Z/28)" under *Competitive Driving Mode on page 9-40*.

PERF TRACTION 2 – DRY ACTIVE HANDLING ON CHASSIS MODE TOUR (ZL1 Coupe and Z/28 Only)

This message displays when this Performance Traction Management (PTM) mode is selected. The TCS and StabiliTrak OFF cluster lights will also be on when this mode is selected. Once this message is acknowledged, PTM2 – DRY ESC = ON displays on the bottom of the digital speed page. Launch Control is available when this mode is selected. In this mode, the Traction Control and Active Handling System are available but intended for use on dry race track conditions. Adjust your driving accordingly. See "Performance Traction Management (PTM) (ZL1 Coupe and Z/28 Only)" and "Launch Control (V8 with Manual Transmissions except Z/28)" under *Competitive Driving Mode on page 9-40*.

PERF TRACTION 3 – SPORT 1 ACTIVE HANDLING ON CHASSIS MODE SPORT (ZL1 Coupe and Z/28 Only)

This message displays when this Performance Traction Management (PTM) mode is selected. The TCS and StabiliTrak OFF cluster lights will also be on when this mode is selected. Once this message is acknowledged, PTM3 – SPORT1 ESC = ON displays on the bottom of the digital speed page. Launch Control is available when this mode is selected. In this mode, the Traction Control and Active Handling System are available but intended for use on dry race track conditions. Adjust your driving accordingly. See "Performance Traction Management (PTM) (ZL1 Coupe and Z/28 Only)" and "Launch Control (V8 with Manual Transmissions except Z/28)" under *Competitive Driving Mode on page 9-40*.

PERF TRACTION 4 – SPORT 2 ACTIVE HANDLING OFF CHASSIS MODE SPORT (ZL1 Coupe and Z/28 Only)

This message displays when this Performance Traction Management (PTM) mode is selected. The TCS and StabiliTrak OFF cluster lights will also be on when this mode is selected. Once this message is acknowledged, PTM4 – SPORT2 ESC = OFF displays on the bottom of the digital speed page. Launch Control is available when this mode is selected. In this mode, the Traction Control is available but intended for use on dry race track conditions. The Active Handling System is disabled when this mode is selected. This mode will require more driver skill than modes 1–3. Adjust your driving accordingly. See

"Performance Traction Management (PTM) (ZL1 Coupe and Z/28 Only)" and "Launch Control (V8 with Manual Transmissions except Z/28)" under *Competitive Driving Mode on page 9-40*.

PERF TRACTION 5 – RACE ACTIVE HANDLING OFF CHASSIS MODE TRACK (ZL1 Coupe and Z/28 Only)

This message displays when this Performance Traction Management (PTM) mode is selected. The TCS and StabiliTrak OFF cluster lights will also be on when this mode is selected. Once this message is acknowledged, PTM5 – RACE ESC = OFF displays on the bottom of the digital speed page. Launch Control is available when this mode is selected. In this mode, the Traction Control is available but intended for use on dry race track conditions. The Active Handling System is disabled when this mode is selected. This mode will require more driver skill than modes 1–4. Adjust your driving accordingly. See "Performance Traction Management (PTM) (ZL1 Coupe and Z/28 Only)" and "Launch Control (V8 with Manual Transmissions except Z/28)" under *Competitive Driving Mode on page 9-40*.

SERVICE STABILITRAK

This message displays if there is a problem with the StabiliTrak® system. If this message appears, try to reset the system. Stop; turn off the engine and remove the key from the ignition; open and close the driver door and wait for at least one minute. During this time you should notice the lights on the cluster turn off. After a minute has passed, start the engine again. If this message still comes on, it means there is a problem. See your dealer for service. The vehicle is safe to drive; however, you do not have the benefit of StabiliTrak, so reduce your speed and drive accordingly.

SERVICE SUSPENSION SYSTEM (ZL1 Only)

This message displays when the Selective Ride Control system has detected a malfunction and the vehicle speed will be limited. The system must be serviced. See your dealer. See *Selective Ride Control on page 9-44* and "SPEED LIMITED TO XXX (ZL1 Only)" under *Vehicle Speed Messages on page 5-42*.

SERVICE TRACTION CONTROL

This message displays when there is a problem with the Traction Control System (TCS). When this message is displayed, the system will not limit wheel spin. Adjust your driving accordingly. See your dealer for service.

STABILITRAK COMPETITIVE MODE (LS3, L99 and ZL1 Convertible Only)

This message may display when Competitive Mode is selected. See *Competitive Driving Mode on page 9-40*.

TRACTION CONTROL OFF

This message displays when the Traction Control System (TCS) has been disabled. See *Traction Control/ Electronic Stability Control on page 9-38*.

Airbag System Messages

SERVICE AIRBAG

This message displays if there is a problem with the airbag system. Take the vehicle to your dealer for service.

Security Messages

THEFT ATTEMPTED

This message displays if the vehicle detects a tamper condition.

Service Vehicle Messages

SERVICE POWER STEERING

This message is displayed if there is a problem with the power steering system and a chime may sound. Take the vehicle to your dealer for service.

SERVICE VEHICLE SOON

This message is displayed if there is a problem with the vehicle. Take the vehicle to your dealer for service.

Tire Messages

TIRE PRESSURE LOW ADD AIR TO TIRE

This message displays if the vehicle detects low pressure in one or more tires.

This message also displays LEFT FRONT, RIGHT FRONT, LEFT REAR, or RIGHT REAR to indicate the location of the low tire.

The low tire pressure warning light will also come on. See *Tire Pressure Light on page 5-22*.

If a tire pressure message appears on the DIC, stop as soon as you can. Inflate the tires by adding air until the tire pressure is equal to the values shown on the Tire and Loading Information label. See *Tires on page 10-56*, *Vehicle Load Limits on page 9-14*, and *Tire Pressure on page 10-65*.

The DIC also shows the tire pressure values. See *Driver Information Center (DIC) on page 5-24*.

SERVICE TIRE MONITOR SYSTEM

This message displays if there is a problem with the Tire Pressure Monitor System (TPMS). See *Tire Pressure Monitor Operation on page 10-68*.

TIRE LEARNING ACTIVE

This message displays when the system is learning new tires. See *Tire Pressure Monitor Operation on page 10-68*.

Transmission Messages

1 – 4 SHIFT

This message displays when you can only shift from 1 (First) to 4 (Fourth) instead of 1 (First) to 2 (Second). See *Manual Transmission on page 9-34*.

PRESS CLUTCH TO START

This message displays when attempting to start a vehicle with a manual transmission without pressing on the clutch pedal.

SERVICE TRANSMISSION

This message displays if there is a problem with the transmission. See your dealer.

SHIFT DENIED

This message displays when attempting to use the automatic transmission manual mode to shift to too low of a gear. See *Manual Mode on page 9-31*.

SHIFT TO PARK

This message displays when the transmission needs to be shifted to P (Park). This may appear when attempting to remove the key from the ignition if the vehicle is not in P (Park).

TRANSMISSION HOT – IDLE ENGINE

This message displays and a chime sounds if the transmission fluid in the vehicle gets hot. Driving with the transmission fluid temperature high can cause damage to the vehicle. Stop the vehicle and let it idle to allow the transmission to cool. This message clears when the fluid temperature reaches a safe level.

Vehicle Reminder Messages

ICE POSSIBLE DRIVE WITH CARE

This message is displayed when ice conditions are possible.

TURN WIPER CONTROL TO INTERMITTENT FIRST

This message is displayed when attempting to adjust the intermittent wiper speed without intermittent selected on the wiper control. See *Windshield Wiper/Washer on page 5-3*.

Vehicle Speed Messages

DRIVER SELECTED SPEED LIMIT EXCEEDED

This message is displayed when the vehicle speed is greater than the set speed. See “Speed Warning” under *Driver Information Center (DIC) on page 5-24*.

SPEED LIMITED TO XXX (ZL1 Only)

This message displays when a malfunction is present in the Selective Ride Control system. The vehicle speed will be limited to a value determined by the vehicle when the shock absorber system has failed and the shocks are in their full soft mode. Have the vehicle serviced by your dealer as soon as possible.

Window Messages

OPEN, THEN CLOSE DRIVER/ PASSENGER WINDOW

This message is displayed when the window needs to be reprogrammed. If the vehicle's battery has been recharged or disconnected, you will need to program each front window for the express-up feature to work. See *Power Windows on page 2-15*.

Vehicle Personalization

Use the audio system controls to access the personalization menus for customizing vehicle features.

The following are all possible personalization features. Depending on the vehicle, some may not be available.

Infotainment System Audio System Controls

Using the Faceplate

MENU/SELECT Knob

- Press to enter, select, or activate a highlighted menu option.
- Turn to highlight a menu option.
- Press to enable or disable a system setting.

⇦ BACK

- Press to exit a menu.
- Press to return to a previous screen.

Using the Touch Screen

Press a screen feature to:

- View more feature options.
- Enable or disable the feature.

△ **:** Press to scroll up.

▽ **:** Press to scroll down.

Back: Press to return to the previous menu.

To access the personalization menu:

1. Press Config on the Home page on the infotainment system display or CONFIG on the faceplate.
2. Select the desired feature to display a list of available options.
3. Select the desired feature setting.

Personalization Menus

The following list of menu items may be available:

- Languages
- Time and Date
- Radio Settings
- Phone Settings
- Navigation Settings
- Display Settings
- Vehicle Settings

Each menu is detailed in the following information.

Languages

Select Language, then select from the available language(s).

Time and Date

Manually set the time and date. See *Clock on page 5-4*.

Radio Settings

Select and depending on the radio the following may display:

- Auto Volume
- Gracenote Options
- XM Channel Art
- Max Startup Volume
- Maximum Startup Volume
- Number of Favorites Pages
- Radio Favorites
- RDS Options
- XM Categories
- Software Versions Menu

Auto Volume

This feature adjusts the volume to minimize the effects of unwanted background noise that can result from changing road surfaces, driving speeds, or open windows. This feature works best at lower volume settings where background noise is typically louder than the sound system volume.

Select Off, Low, Medium, or High.

Gracenote Options

Select and the following may display:

- Normalization

Normalization

This feature improves voice recognition and media groupings. See “CD Player,” “USB,” “Auxiliary Devices,” and “Bluetooth Audio” in the infotainment manual.

Select to enable or disable.

XM Channel Art

This feature turns the XM Audio page background on the XM Channel display on and off.

Select to enable or disable.

Max Startup Volume or Maximum Startup Volume

This feature sets the maximum startup volume. If the vehicle is started and the volume is greater than this level, the volume is adjusted to this level.

Press + or − to increase or decrease the volume.

Number of Favorites Pages or Radio Favorites

Press to set the number of favorites to display.

Select the desired number.

RDS Options

Select and the following may display:

- RDS
- Text Scroll Freeze
- RDS Text

RDS

Select to turn RDS on or off. See “RDS (Radio Data System)” in *AM-FM Radio on page 7-7*.

Text Scroll Freeze

When on, this allows the RDS Text will scroll across the radio screen.

Select to enable or disable.

RDS Text

When on, this allows the RDS information from the station to be displayed.

Select to enable or disable.

XM Categories

This allows which available XM Categories are used and displayed.

Press to enable or disable available categories.

Software Versions Menu

Press to display information about the system and update software if available.

Phone Settings

Select and depending on the radio the following may display:

- Device List
- Pair Device
- Pair Device (Phone)
- Pair Device (GPS)

Device List

Select to connect to a different phone source, disconnect a phone, or delete a phone.

Pair Device

Select to pair a new device. See “Pairing a Phone/Device” in “Bluetooth” in the infotainment manual.

Pair Device (Phone) or Pair Device (GPS)

Select to pair a new phone. See “Pairing a Phone” in “Bluetooth (Infotainment Controls)” in *Bluetooth (Voice Recognition) on page 7-25* or *Bluetooth (Infotainment Controls) on page 7-21* or *Bluetooth (Overview) on page 7-20* or “Pairing a Phone/Device” “Bluetooth” in the infotainment manual.

Navigation Settings

See “Navigation Settings” in “Configure Menu” in the infotainment manual.

Display Settings

Press and the following may display:

- Home Page Menu
- Rear Camera Options
- Display Off
- Map Settings

Home Page Menu

Select and the following may display:

- Customize
- Sort
- Restore Home Page Defaults

Customize

This feature allows the selection of what icons will be on the first Home Page.

Select and follow the screen prompts.

Sort

This feature allows the icons on the Home Page to be moved.

Select and follow the screen prompts.

Restore Home Page Defaults

This feature will restore the Home Page to the factory settings.

Select and follow the screen prompts.

Rear Camera Options

For more information on Rear Camera Options, see *Rear Vision Camera (RVC) on page 9-49*.

Display Off

Press to turn the display off. The display will return when any radio buttons are pressed or the screen is touched (if equipped).

Map Settings

See “Map Settings” in “Configure Menu” in the infotainment manual.

Vehicle Settings

Select and the following may display:

- Climate and Air Quality

- Comfort and Convenience
- Collision Detection Systems
- Lighting
- Power Door Locks
- Remote Lock/Unlock/Start
- Return to Factory Settings?

Climate and Air Quality

Select and the following may display:

- Remote Start Auto Heated Seats

Remote Start Auto Heated Seats

When on, this feature will turn the heated seats on when using remote start.

Select enable or disable.

Comfort and Convenience

Select and the following may display:

- Chime Volume
- Button Chime

Chime Volume

This allows the selection of the chime volume level to be changed.

Select Normal or High.

Button Chime

This allows this feature to be turned on and off.

Select or deselect.

Collision Detection Systems

Select the following may display:

- Park Assist

Park Assist

This allows the Parking Assist feature to be turned on or off.

Select On or Off.

Lighting

Select and the following may display:

- Vehicle Locator Lights
- Exit Lighting

Vehicle Locator Lights

This allows the feature to be turned on or off. When on, the headlamps, parking lamps, taillamps, license plate lamps, and back-up lamps will illuminate at night when 🔓 is pressed on the RKE transmitter.

Select to enable or disable.

Exit Lighting

This allows the selection of how long the exterior lamps stay on when leaving the vehicle and it is dark outside.

Select OFF, 30 seconds, 1 minute, or 2 minutes.

Power Door Locks

Select and depending on the radio the following may display:

- Open Door Anti Lock Out
- Unlocked Door Anti Lock Out
- Auto Door Unlock
- Delayed Door Lock

Open Door Anti Lock Out or Unlocked Door Anti Lock Out

When on, this feature will keep the driver door from locking until the door is closed. If this feature is turned on, the Delayed Door Lock menu will not be available.

Select to enable or disable.

Auto Door Unlock

This allows selection of which doors will automatically unlock when the vehicle is shifted into P (Park).

Select All Doors, Driver Door, or OFF.

Delayed Door Lock

When on, this feature will delay the locking of the doors. See *Delayed Locking on page 2-8*.

Select to enable or disable.

Remote Lock/Unlock/Start

Select and depending on the radio the following may display:

- Remote Unlock Feedback
- Remote Unlock Light Feedback
- Remote Lock Feedback
- Remote Door Unlock

Remote Unlock Feedback or Remote Unlock Light Feedback

When on, the exterior lamps will flash when unlocking the vehicle with the RKE transmitter.

Depending on the radio select Flash Lights or OFF, or select to enable or disable.

Remote Lock Feedback

This allows selection of what feedback is provided when unlocking the vehicle with the RKE transmitter.

Select Lights and Horn, Lights Only, Horn Only, or OFF.

Remote Door Unlock

This allows selection of which doors will unlock on the first press of 🔓 on the RKE transmitter.

Select Driver Door or All Doors.

If Driver Door is selected, all doors will unlock on the second press of 🔓 within five seconds of the prior press.

Return to Factory Settings?

This returns all of the vehicle personalization settings to the factory settings.

Select Yes or No.

Universal Remote System

See *Radio Frequency Statement on page 13-12*.

Universal Remote System Programming

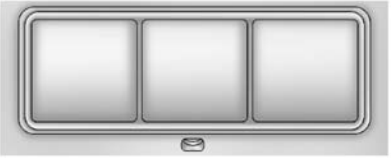

If equipped, these buttons are in the overhead console.

This system can replace up to three remote control transmitters used to activate devices such as garage door openers, security systems, and home automation devices. These instructions refer to a garage door opener, but can be used for other devices.

Do not use the Universal Remote system with any garage door opener that does not have the stop and reverse feature. This includes any garage door opener model manufactured before April 1, 1982.

Read these instructions completely before programming the Universal Remote system. It may help to have another person assist with the programming process.

Keep the original hand-held transmitter for use in other vehicles as well as for future programming. Erase the programming when vehicle ownership is terminated. See “Erasing Universal Remote System Buttons” later in this section.

To program a garage door opener, park outside directly in line with and facing the garage door opener receiver. Clear all people and objects near the garage door.

Make sure the hand-held transmitter has a new battery for quick and accurate transmission of the radio-frequency signal.

Programming the Universal Remote System

For questions or help programming the Universal Remote system, call 1-800-355-3515 or see www.homelink.com.

Programming involves time-sensitive actions, and may time out causing the procedure to be repeated.

To program up to three devices:

1. Hold the end of the hand-held transmitter about 3 to 8 cm (1 to 3 in) away from the Universal Remote system buttons with the indicator light in view. The hand-held transmitter was supplied by the manufacturer of the garage door opener receiver.

2. At the same time, press and hold both the hand-held transmitter button and one of the three Universal Remote system buttons to be used to operate the garage door. Do not release either button until the indicator light changes from a slow to a rapid flash. Then release both buttons.

   Some garage door openers may require substitution of Step 2 with the procedure under in “Radio Signals for Canada and Some Gate Operators” later in this section.

3. Press and hold the newly programmed Universal Remote system button for five seconds while watching the indicator light and garage door activation.

   - If the indicator light stays on continuously or the garage door moves when the button is pressed, then programming is complete. There is no need to complete Steps 4–6.
   - If the indicator light does not come on or the garage door does not move, a second button press may be required. For a second time, press and hold the newly programmed button for five seconds. If the light stays on or the garage door moves, programming is complete.
   - If the indicator light blinks rapidly for two seconds, then changes to a solid light and the garage door does not move, continue with programming Steps 4–6.

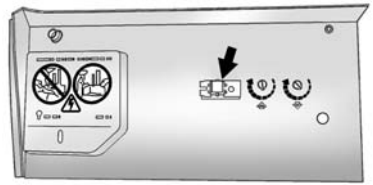

Learn or Smart Button

4. After completing Steps 1–3, locate the Learn or Smart button inside garage on the garage door opener receiver. The name and color of the button may vary by manufacturer.
5. Press and release the Learn or Smart button. Step 6 must be completed within 30 seconds of pressing this button.
6. Inside the vehicle, press and hold the newly programmed Universal Remote system button for two seconds and then release it. If the garage door does not move or the lamp on the garage door opener receiver

does not flash, press and hold the same button a second time for two seconds, then release it. Again, if the door does not move or the garage door lamp does not flash, press and hold the same button a third time for two seconds, then release it.

The Universal Remote system should now activate the garage door.

Repeat the process for programming the two remaining buttons.

Radio Signals for Canada and Some Gate Operators

For questions or programming help call 1-800-355-3515 or see www.homelink.com.

Canadian radio-frequency laws and some U.S. gate operators require transmitter signals to time out or quit after several seconds of transmission. This may not be long enough for the Universal Remote system to pick up the signal during programming.

If the programming did not work, replace Step 2 under “Programming the Universal Remote System” with the following:

Press and hold the Universal Remote system button while pressing and releasing the hand-held transmitter button every two seconds until the signal has been successfully accepted by the Universal Remote system. The Universal Remote system indicator light will flash slowly at first and then rapidly. Proceed with Step 3 under “Programming the Universal Remote System” to complete.

Universal Remote System Operation

Using the Universal Remote System

Press and hold the appropriate Universal Remote system button for at least one-half second. The indicator light will come on while the signal is being transmitted.

Erasing Universal Remote System Buttons

Erase all programmed buttons when vehicle ownership is terminated.

To erase:

1. Press and hold the two outside buttons until the indicator light begins to flash. This should take about 10 seconds.
2. Release both buttons.

Reprogramming a Single Universal Remote System Button

To reprogram any of the system buttons:

1. Press and hold any one of the buttons. Do not release the button.
2. The indicator light will begin to flash after 20 seconds. Without releasing the button, proceed with Step 1 under “Programming the Universal Remote System.”

✍ NOTES

Lighting

Exterior Lighting
Exterior Lamp Controls 6-1
Headlamp High/Low-Beam Changer 6-2
Flash-to-Pass 6-2
Daytime Running Lamps (DRL) 6-2
Automatic Headlamp System 6-3
Hazard Warning Flashers 6-4
Turn and Lane-Change Signals 6-4
Front Fog Lamps 6-5

Interior Lighting
Instrument Panel Illumination Control 6-5
Dome Lamps 6-6

Lighting Features
Entry Lighting 6-6
Exit Lighting 6-6
Theater Dimming 6-6
Battery Load Management 6-6
Battery Power Protection 6-7
Exterior Lighting Battery Saver 6-7

Exterior Lighting

Exterior Lamp Controls

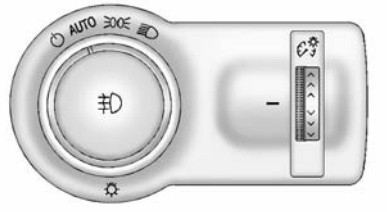

The exterior lamp control is located on the instrument panel, on the outboard side of the steering wheel.

There are four positions:

(Off): Briefly turn to this position to turn the automatic light control off or on again. When released, the control returns to the AUTO position.

AUTO (Automatic): Automatically turns the exterior lamps on and off, depending on outside lighting.

AUTO also controls the Daytime Running Lamps (DRL). See *Daytime Running Lamps (DRL) on page 6-2*.

(Parking Lamps): Turns on the parking lamps including all lamps, except the headlamps.

A warning chime sounds if the driver door is opened when the ignition switch is off and the parking lamps are on.

(Headlamps): Turns on the headlamps together with the parking lamps and instrument panel lights.

A warning chime sounds if the driver door is opened when the ignition switch is off and the headlamps are on.

(Front Fog Lamps): Press to turn the fog lamps on or off. The fog lamps come on together with the parking lamps, taillamps, sidemarker lamps, license plate lamps, and instrument panel lights.

See *Front Fog Lamps on page 6-5*.

Headlamp High/ Low-Beam Changer

Push the turn signal lever away from you and release to turn the high beams on. To return to low beams, push the lever again or pull it toward you and release.

This indicator light turns on in the instrument cluster when the high-beam headlamps are on.

Flash-to-Pass

The flash-to-pass feature works with the low beams or Daytime Running Lamps (DRL) on or off.

To flash the high beams, pull the turn signal lever all the way toward you, then release it.

Daytime Running Lamps (DRL)

DRL can make it easier for others to see the front of your vehicle during the day. DRL are required on all vehicles first sold in Canada.

A light sensor on top of the instrument panel makes the DRL work, so be sure it is not covered.

The DRL system will make the low-beam headlamps come on at a reduced brightness or for vehicles with High Intensity Discharge (HID) headlamps, the dedicated DRL lights will come on when the following conditions are met:

- The ignition is in the ON/RUN position.
- The exterior lamps control is in AUTO, or has been briefly turned to ⏻ to turn the automatic light control on again.
- The engine is running.

When the DRL are on, the headlamps, taillamps, sidemarker lamps, instrument panel lights, and other lamps will not be on.

The headlamps automatically change from DRL to the regular headlamps depending on the darkness of the surroundings. The other lamps that come on with the headlamps will also come on.

When it is bright enough outside, the headlamps will go off and the DRL will come on.

To turn the DRL off or on again, turn the exterior lamps control to the ⏻ position and then release. For vehicles first sold in Canada, the DRL cannot be turned off.

The regular headlamp system should be turned on when needed.

Automatic Headlamp System

When it is dark enough outside and the headlamp switch is in AUTO, the automatic headlamp system will turn on the headlamps at the normal brightness along with other lamps such as the taillamps, sidemarker lamps, parking lamps, license plate lamps, and the instrument panel lights. The radio lights will also be dim.

To turn off the automatic headlamp system, turn the exterior lamps switch to the ⏻ position and then release. For vehicles first sold in Canada, the transmission must be in the P (Park) position, before the automatic headlamp system can be turned off.

The vehicle has a light sensor on the top of the instrument panel. Do not cover this sensor or the system will come on whenever the ignition is on.

The system may also turn on the headlamps when driving through a parking garage, heavy overcast weather, or a tunnel. This is normal.

There is a delay in the transition between the daytime and nighttime operation of the Daytime Running Lamps (DRL) and the automatic headlamp system so that driving under bridges or bright overhead street lights does not affect the system. The DRL and automatic headlamp system will only be affected when the light sensor sees a change in lighting lasting longer than the delay.

If the vehicle is started in a dark garage, the automatic headlamp system comes on immediately. If it is light outside when the vehicle leaves the garage, there will be a slight delay before the automatic

headlamp system changes to the DRL. During that delay, the instrument cluster may not be as bright as usual. Make sure the instrument panel brightness control is in the full bright position. See *Instrument Panel Illumination Control on page 6-5*.

Lights On with Wipers

If the windshield wipers are activated in daylight with the engine on, and the exterior lamp control is in AUTO, the headlamps, parking lamps, and other exterior lamps come on. The transition time for the lamps coming on varies based on wiper speed. When the wipers are not operating, these lamps turn off. Move the exterior lamp control to ⏻ or ≡DC to disable this feature.

Hazard Warning Flashers

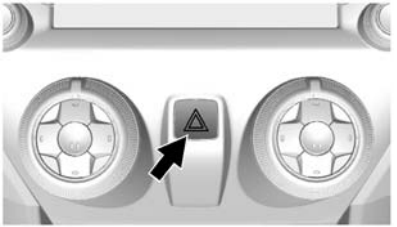

⚠ **(Hazard Warning Flasher):** Press this button to make the front and rear turn signal lamps flash on and off. This warns others that you are having trouble. Press again to turn the flashers off.

Turn and Lane-Change Signals

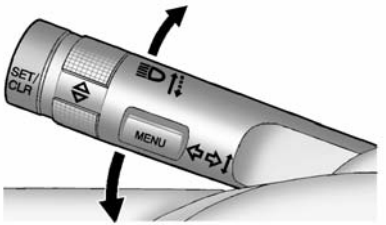

Move the lever all the way up or down to signal a turn.

An arrow on the instrument cluster flashes in the direction of the turn or lane change.

Raise or lower the lever until the arrow starts to flash to signal a lane change. Hold it there until the lane change is completed. If the lever is briefly pressed and released, the turn signal flashes three times.

The lever returns to its starting position whenever it is released.

If after signaling a turn or lane change the arrow flashes rapidly or does not come on, a signal bulb may be burned out.

Have any burned out bulbs replaced. If a bulb is not burned out, check the fuse. See *Electrical System Overload on page 10-48*.

Front Fog Lamps

For vehicles with front fog lamps, the button is on the exterior lamp control, on the outboard side of the steering wheel.

The ignition must be turned to ON/RUN to turn on the fog lamps.

(Front Fog Lamps): Press to turn the fog lamps on or off. An indicator light on the instrument cluster comes on when the fog lamps are on.

The fog lamps come on together with the parking and sidemarker lamps.

If the high-beam headlamps are turned on, the fog lamps will turn off. If the high-beam headlamps are turned off, the fog lamps will turn back on again.

For vehicles with High Intensity Discharge (HID) headlamps, the Daytime Running Lamps (DRL) replace the fog lamps.

Some localities have laws that require the headlamps to be on along with the fog lamps.

Interior Lighting

Instrument Panel Illumination Control

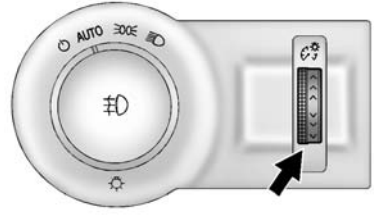

This feature controls the brightness of the instrument panel lights.

(Instrument Panel Brightness): Move the thumbwheel up or down and hold, to brighten or dim the instrument panel lights.

Dome Lamps

To change the settings, press the following:

(Off): Turns the lamp off, even when a door is open.

(Door): Turns the lamp on automatically when a door is opened.

(On): Turns the lamp on.

Lighting Features

Entry Lighting

When it is dark enough outside or in areas of limited lighting, the interior lamps, headlamps, back-up lamps, and parking lamps come on when is pressed on the Remote Keyless Entry (RKE) transmitter. The lamps inside the vehicle come on when any door is opened. They stay on for about 20 seconds. When all of the doors have been closed or the ignition is turned to ON/RUN, they gradually fade out.

This feature can be changed. See “Vehicle Locator Lights” under *Vehicle Personalization on page 5-42*.

Exit Lighting

The headlamps, taillamps, parking lamps, back-up lamps, outside mirror lamps, and license plate lamps come on at night, or in areas with limited lighting, when the key is removed from the ignition. The dome lamp comes on after the ignition is changed to the OFF position. The exterior lamps and dome lamp remain on for a set amount of time, then automatically turn off.

The exterior lamps turn off immediately by turning the exterior lamp control off.

This feature can be changed. See *Vehicle Personalization on page 5-42*.

Theater Dimming

This feature allows for a three to five second fade out of the courtesy lamps instead of having them turn off immediately.

Battery Load Management

The vehicle has Electric Power Management (EPM) that estimates the battery's temperature and state

of charge. It then adjusts the voltage for best performance and extended life of the battery.

When the battery's state of charge is low, the voltage is raised slightly to quickly bring the charge back up. When the state of charge is high, the voltage is lowered slightly to prevent overcharging. If the vehicle has a voltmeter gauge or a voltage display on the Driver Information Center (DIC), you may see the voltage move up or down. This is normal. If there is a problem, an alert will be displayed.

The battery can be discharged at idle if the electrical loads are very high. This is true for all vehicles. This is because the generator (alternator) may not be spinning fast enough at idle to produce all of the power needed for very high electrical loads.

A high electrical load occurs when several of the following are on, such as: headlamps, high beams, fog lamps, rear window defogger, climate control fan at high speed, heated seats, engine cooling fans, trailer loads, and loads plugged into accessory power outlets.

EPM works to prevent excessive discharge of the battery. It does this by balancing the generator's output and the vehicle's electrical needs. It can increase engine idle speed to generate more power whenever needed. It can temporarily reduce the power demands of some accessories.

Normally, these actions occur in steps or levels, without being noticeable. In rare cases at the highest levels of corrective action, this action may be noticeable to the driver. If so, a DIC message might be displayed, and it is recommended that the driver reduce the electrical loads as much as possible. See *Battery Voltage and Charging Messages on page 5-33*.

Battery Power Protection

This feature shuts off the dome lamp if it is left on for more than 10 minutes when the ignition is in LOCK/OFF. This helps to prevent the battery from running down.

Exterior Lighting Battery Saver

The exterior lamps turn off about 10 minutes after the ignition is turned off, if the parking lamps or headlamps have been manually left on. This protects against draining the battery. To restart the 10-minute timer, turn the exterior lamp control to the off position and then back to the parking lamp or headlamp position.

To keep the lamps on for more than 10 minutes, the ignition must be in the ACC/ACCESSORY or ON/RUN position.

✍ NOTES

Infotainment System

Introduction
Infotainment 7-1
Theft-Deterrent Feature 7-2
Overview 7-2
Operation 7-3

Radio
AM-FM Radio 7-7
Satellite Radio 7-9
Radio Reception 7-10
Backglass Antenna 7-11
Diversity Antenna System . . . 7-12
Multi-Band Antenna 7-12

Audio Players
CD Player 7-12
Auxiliary Devices 7-14

Phone
Bluetooth (Overview) 7-20
Bluetooth (Infotainment Controls) 7-21
Bluetooth (Voice Recognition) 7-25

Introduction

Infotainment

Base radio information is included in this manual. See the infotainment manual for information on other available infotainment systems.

Read the following pages to become familiar with these features.

⚠ Warning

Taking your eyes off the road for too long or too often while using any infotainment feature can cause a crash. You or others could be injured or killed. Do not give extended attention to infotainment tasks while driving. Limit your glances at the vehicle displays and focus your attention on driving. Use voice commands whenever possible.

The infotainment system has built-in features intended to help avoid distraction by disabling some functions when driving. These functions may gray out when they are unavailable. Many infotainment features are also available through the instrument cluster and steering wheel controls.

Before driving:

- Become familiar with the operation, faceplate buttons, and screen buttons.
- Set up the audio by presetting favorite stations, setting the tone, and adjusting the speakers.
- Set up phone numbers in advance so they can be called easily by pressing a single button or by using a single voice command if equipped with Bluetooth phone capability.

See *Defensive Driving on page 9-3*.

To play the infotainment system with the ignition off, see *Retained Accessory Power (RAP) on page 9-23*.

Theft-Deterrent Feature

The theft-deterrent feature works by learning a portion of the Vehicle Identification Number (VIN) to the infotainment system. The infotainment system does not operate if it is stolen or moved to a different vehicle.

Overview

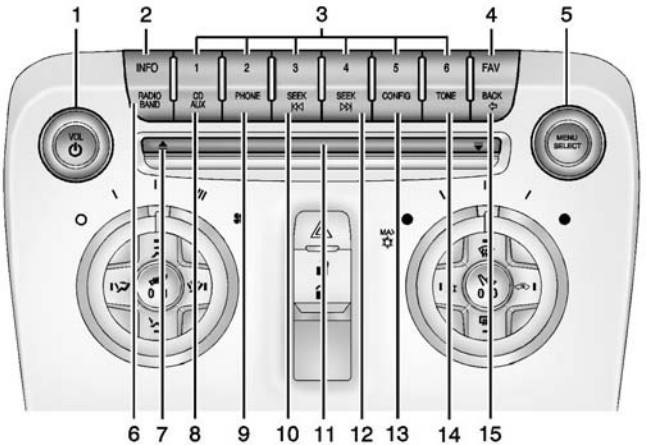

1. VOL/ ⏻
   - Press: Turns the system on or off.
   - Turn: Adjusts the volume.

2. INFO
   - Radio: Shows available information about the current station.
   - CD/MP3: Shows available information about the current track.

3. Buttons 1−6
   - Radio: Saves and selects favorite stations.
4. FAV
   - Radio: Opens the favorites list.
5. MENU/SELECT
   - Press: Opens the menus and selects menu items.
   - Turn: Highlights menu items or sets values while in a menu. Manually selects radio stations while listening to the radio.
6. RADIO/BAND
   - Changes the band while listening to the radio.
   - Selects the radio when listening to a different audio source.
7. ⏏ (CD Eject)
   - Removes the CD from the slot.
8. CD/AUX
   - Selects between the CD player or a connected external audio source.
9. PHONE
   - Opens the phone main menu.
   - Mutes the audio system.
10. SEEK ⏮
    - Radio: Seeks the previous station.
    - CD: Selects the previous track or rewinds within a track.
11. CD Slot
    - Insert a CD.
12. SEEK ⏭
    - Radio: Seeks the next station.
    - CD: Selects the next track or fast forwards within a track.
13. CONFIG
    - Opens the Configuration Settings menu.
14. TONE
    - Opens the Tone Settings menu.
15. BACK ⇦
    - Menu: Moves one level back.
    - Character Input: Deletes the last character.

Operation

Controls

The infotainment system is operated by using the pushbuttons, multifunction knobs, and menus that are shown on the display, and steering wheel controls, if equipped.

Turning the System On or Off

VOL/ ⏻ (Volume/Power): Press to turn the system on and off.

Automatic Off

If the infotainment system has been turned on after the ignition is turned off, the system turns off automatically after 10 minutes.

Volume Control

VOL/ ⏻ (Volume/Power): Turn to adjust the volume.

PHONE: For vehicles with OnStar®, press and hold PHONE to mute the infotainment system. Press and hold PHONE again, or turn VOL/⏻ to cancel mute.

For vehicles without OnStar, press PHONE to mute the infotainment system. Press PHONE again, or turn VOL/⏻ to cancel mute.

Menu System

Controls

The MENU/SELECT knob and the BACK ⇦ button are used to navigate the menu system.

MENU/SELECT: Press to:

- Enter the menu system.
- Select or activate the highlighted menu option.
- Confirm a set value.
- Switch a system setting on or off.

Turn to:

- Highlight a menu option.
- Select a value.

BACK ⇦ : Press to:

- Exit a menu.
- Return from a submenu screen to the previous menu screen.
- Delete the last character in a sequence.

Selecting a Menu Option

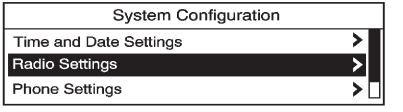

1. Turn the MENU/SELECT knob to move the highlighted bar.
2. Press the MENU/SELECT knob to select the highlighted option.

Submenus

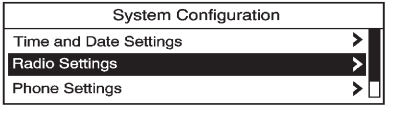

An arrow on the right-hand edge of the menu indicates that it has a submenu with other options.

Activating a Setting

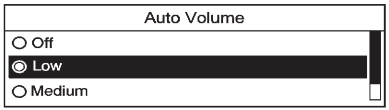

1. Turn the MENU/SELECT knob to highlight the setting.
2. Press the MENU/SELECT knob to activate the setting.

Setting a Value

1. Turn the MENU/SELECT knob to change the current value of the setting.
2. Press the MENU/SELECT knob to confirm the setting.

Turning a Function On or Off

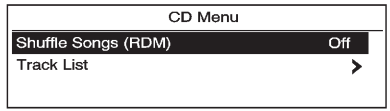

1. Turn the MENU/SELECT knob to highlight the function.
2. Press the MENU/SELECT knob to turn the function on or off.

Entering a Character Sequence

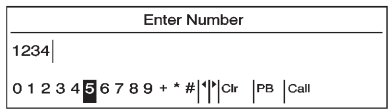

1. Turn the MENU/SELECT knob to highlight the character.
2. Press the MENU/SELECT knob to select the character.

Press the BACK ⇦ button to delete the last character or press and hold BACK ⇦ to delete the entire character sequence.

Audio Settings

The audio settings can be set for each radio band and each audio player source.

To adjust the audio setting, press the TONE button and select the audio setting. Press the ⇦ BACK button to go back to the Tone Settings menu.

To quickly reset an audio setting value to 0:

1. Highlight the option.
2. Press and hold the MENU/SELECT knob until the value changes to 0.

Adjusting the Treble, Midrange, and Bass

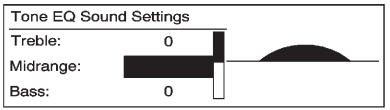

1. Select Treble, Midrange, or Bass.
2. Select the value.

Adjusting the Fader and Balance

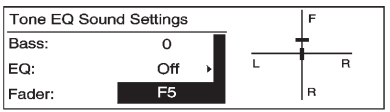

1. Select Fader or Balance.
2. Select the value.

Adjusting the EQ (Equalizer)

For vehicles that have an equalizer:

1. Select EQ.
2. Select the setting.

System Settings

Configuring the Number of Favorite Pages

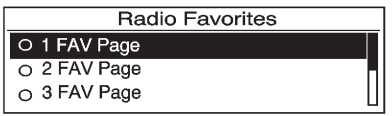

To configure the number of available favorite pages:

1. Press the CONFIG button.
2. Select Radio Settings.
3. Select Radio Favorites.
4. Select the number of available favorite pages.
5. Press the BACK ⇦ button to go back to the System Configuration menu.

Auto Volume

The auto volume feature automatically adjusts the radio volume to compensate for road and wind noise as the vehicle speeds up or slows down, so that the volume level is consistent.

The level of volume compensation can be selected or the auto volume feature can be turned off.

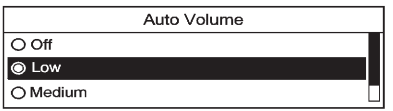

1. Press the CONFIG button.
2. Select Radio Settings.

3. Select Auto Volume.
4. Select the setting.
5. Press the BACK button to go back to the System Configuration menu.

Maximum Startup Volume

The maximum volume played when the radio is first turned on can be set.

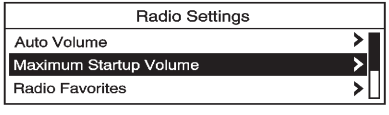

1. Press the CONFIG button.
2. Select Radio Settings.
3. Select Maximum Startup Volume.
4. Select the setting.
5. Press the BACK button to go back to the System Configuration menu.

Radio

AM-FM Radio

Control Buttons

The buttons used to control the radio are:

RADIO/BAND: Press to turn the radio on and choose between AM, FM, and SiriusXM®, if equipped.

SEEK or SEEK : Press to search for stations.

FAV: Press to open the favorites list.

1−6: Press to select preset stations.

MENU/SELECT: Turn to manually search for stations.

RDS (Radio Data System)

The radio may have RDS. The RDS feature is available for use only on FM stations that broadcast RDS information. This feature only works when the information from the radio station is available. In rare cases, a radio station could broadcast incorrect information that causes the radio features to work improperly. If this happens, contact the radio station.

While the radio is tuned to an FM-RDS station, the station name or call letters display.

Radio Menus

Radio menus are available for AM, FM, and SiriusXM, if equipped.

Press the MENU/SELECT knob to open the main radio menu for that frequency.

Selecting a Band

Press the RADIO/BAND button to choose AM, FM, or SiriusXM, if equipped. The last station that was playing starts playing again.

Selecting a Station

Seek Tuning

Briefly press SEEK ⏮ or SEEK ⏭ to automatically search for the next available station. If a station is not found, the radio switches to a more sensitive search level. If a station still is not found, the frequency that was last active begins to play.

Press and hold SEEK ⏮ or SEEK ⏭ until the station on the display is reached, then release the button.

Manual Tuning

Turn the MENU/SELECT knob to select the frequency on the display.

Favorites List

1. Press the MENU/SELECT knob.
2. Select Favorites List.
3. Select the station.

Station Lists

1. Press the MENU/SELECT knob.
2. Select AM or FM Station List. All receivable stations in the current reception area are displayed. If no station list has been created, an automatic station search is done.
3. Select the station.

Updating Station and Category Lists

If stations stored in the station list can no longer be received:

1. Press the MENU/SELECT knob.
2. Select Update AM or FM Station List, if the stations stored in the station list are no longer received. A station search will be completed and the first station in the updated list will play.

To cancel the station search, press the MENU/SELECT knob.

Category Lists

Most stations that broadcast an RDS program type (PTY) code specify the type of programming transmitted. Some stations change the PTY code depending on the content. The system stores the RDS stations, sorted by program type, in the FM category list.

To search for a programming type determined by station:

1. Select FM category list. A list of all programming types available displays.
2. Select the programming type. A list of stations that transmit programming of the selected type displays.
3. Select the station.

The category lists are updated when the corresponding station lists are updated.

Storing and Retrieving Favorites

Stations from all bands can be stored in the favorite lists in any order.

Up to six stations can be stored in each favorite page and the number of available favorite pages can be set.

Storing a Station as a Favorite

To store the station to a position in the list, press the corresponding numeric button 1−6 until the station can be heard again.

Retrieving Stations

Press the FAV button to open a favorite page or to switch to another favorite page. Briefly press one of the 1−6 buttons to retrieve the station.

Satellite Radio

Vehicles with an XM Satellite Radio tuner and a valid SiriusXM® Satellite Radio subscription can receive SiriusXM programming.

SiriusXM Satellite Radio Service

SiriusXM is a satellite radio service based in the 48 contiguous United States and 10 Canadian provinces. SiriusXM Satellite Radio has a wide variety of programming and commercial-free music, coast to coast, and in digital-quality sound. During your trial or when you subscribe, you will get unlimited access to SiriusXM Radio Online for when you are not in the vehicle. A service fee is required to receive the SiriusXM service. If SiriusXM service needs to be reactivated, the radio will display "No Subscription Please Renew" on channel XM1. For more information, contact SiriusXM at www.siriusxm.com or 1-866-635-2349 (U.S.), and www.xmradio.ca or 1-877-209-0079 (Canada).

Control Buttons

The buttons used to control the SiriusXM radio are:

RADIO/BAND: Press to turn the radio on and choose between AM, FM, and SiriusXM.

SEEK ⏮ or SEEK ⏭ : Press to search for stations.

FAV: Press to open the favorites list.

1−6: Press to select preset stations.

MENU/SELECT: Turn to search for stations.

Selecting the SiriusXM Band

Press the RADIO/BAND button to choose between the AM, FM, and SiriusXM bands. The last station played in that band begins to play when that band is selected.

SiriusXM Categories

SiriusXM stations are organized in categories.

Removing or Adding Categories

1. Press the CONFIG button.
2. Select XM Categories.
3. Turn the MENU/SELECT knob to highlight the category.
4. Press the MENU/SELECT knob to remove or add the category.

Selecting a SiriusXM Station

SiriusXM stations can be selected by using SEEK ⏮ or SEEK ⏭, the MENU/SELECT knob, or the menu system.

To select a SiriusXM station using SEEK ⏮ or SEEK ⏭, do one of the following:

- Press and release SEEK ⏮ or SEEK ⏭ to go to the previous or next station.
- Press and hold SEEK ⏮ or SEEK ⏭ to scroll through the previous or next stations until the station is reached.

To select a SiriusXM station using the MENU/SELECT knob:

1. Turn the MENU/SELECT knob to highlight a SiriusXM station.
2. Press the MENU/SELECT knob to select the station, or leave the station highlighted.

To select a station using the menu:

1. Press the MENU/SELECT knob.
2. Select XM Stations List.
3. Select the station.

Selecting a Station by Category

1. Press the MENU/SELECT knob.
2. Select XM Category List. A list of all programming types available displays.
3. Select the programming type.
4. Select the station.

Storing and Retrieving Favorites

Stations from all bands can be stored in any order in the favorite pages.

Up to six stations can be stored in each favorite page and the number of available favorite pages can be set.

Storing a Station as a Favorite

To store the station to a position in the list, press and hold the corresponding 1−6 button until the station can be heard again.

Retrieving Stations

Press the FAV button to open a favorite page or to switch to another favorite page. Briefly press one of the 1−6 buttons to retrieve the station.

Radio Reception

Frequency interference and static can occur during normal radio reception if items such as phone chargers, vehicle convenience accessories, and external electronic devices are plugged into the accessory power outlet. If there is

interference or static, unplug the item from the accessory power outlet.

FM

FM signals only reach about 16 to 65 km (10 to 40 mi). Although the radio has a built-in electronic circuit that automatically works to reduce interference, some static can occur, especially around tall buildings or hills, causing the sound to fade in and out.

AM

The range for most AM stations is greater than for FM, especially at night. The longer range can cause station frequencies to interfere with each other. Static can also occur when things like storms and power lines interfere with radio reception. When this happens, try reducing the treble on the radio.

SiriusXM Satellite Radio Service

If equipped, SiriusXM Satellite Radio Service provides digital radio reception. Tall buildings or hills can interfere with satellite radio signals, causing the sound to fade in and out. In addition, traveling or standing under heavy foliage, bridges, garages, or tunnels may cause loss of the SiriusXM signal for a period of time.

Cell Phone Usage

Cell phone usage, such as making or receiving phone calls, charging, or just having the phone on may cause static interference in the radio. Unplug the phone or turn it off if this happens.

Backglass Antenna

The AM-FM antenna is integrated with the rear window defogger in the rear window. Do not scratch the inside surface or damage the lines in the glass. If the inside surface is damaged, it could interfere with radio reception. For proper radio reception, the antenna connector needs to be properly attached to the post on the glass.

If attaching a cell phone antenna to the glass, attach it between the grid lines.

⚠ Caution

Using a razor blade or sharp object to clear the inside rear window can damage the rear window antenna and/or the rear window defogger. Repairs would not be covered by the vehicle warranty. Do not clear the inside rear window with sharp objects.

⚠ Caution

Do not apply aftermarket glass tinting with metallic film. The metallic film in some tinting materials will interfere with or distort the incoming radio reception. Any damage caused to the backglass antenna due to metallic tinting materials will not be covered by the vehicle warranty.

Diversity Antenna System

For vehicles with convertible tops, the AM-FM antenna is a hidden self-tuning system, and is in the rear spoiler. It optimizes the AM and FM signals relative to the vehicle's position and radio station source. No maintenance or adjustments are needed. Do not place loads on the spoiler. If the spoiler is replaced, be sure it is replaced with the correct GM parts for the best AM and FM reception.

Multi-Band Antenna

The multi-band antenna is on the roof of the vehicle. The antenna is used for OnStar, the SiriusXM Satellite Radio Service System, and GPS (Global Positioning System), if the vehicle has these features. Keep the antenna clear of obstructions for clear reception.

If the vehicle has a sunroof, and it is open, reception can also be affected.

Audio Players

CD Player

The CD player can play audio CDs and MP3 CDs.

The CD player will not play 8 cm (3 in) CDs.

Care of CDs

Sound quality can be reduced due to disc quality, recording method, quality of the music recorded, and how the disc has been handled. Handle discs carefully and store them in their original cases or other protective cases away from direct sunlight and dust. If the bottom surface of a disc is damaged, the disc may not play properly or at all. Do not touch the bottom surface of a disc while handling it; this could damage the surface. Pick up discs by grasping the outer edges or the edge of the hole and the outer edge.

If the bottom surface of a disc is dirty, take a soft lint-free cloth, or dampen a clean soft cloth in a

mild neutral detergent solution mixed with water, and clean it. Wipe the disc from the center to the outer edge.

Care of the CD Player

Do not add a label to a disc, as it could get caught in the CD player. If a label is needed, label the top of the recorded disc with a marking pen.

Do not use disc lens cleaners because they could contaminate the lens of the disc optics and damage the CD player.

⚠ Caution

If a label is added to a CD, more than one CD is inserted into the slot at a time, or an attempt is made to play scratched or damaged CDs, the CD player could be damaged. While using the CD player, use only CDs in good condition without any label,

(Continued)

Caution (Continued)

load one CD at a time, and keep the CD player and the loading slot free of foreign materials, liquids, and debris.

Control Buttons

The buttons used to control the CD player are:

CD/AUX: Press to choose between the CD and AUX player.

SEEK ⏮ or SEEK ⏭: Press to select tracks or to fast forward or rewind within a track.

MENU/SELECT: Turn to select tracks.

INFO: Press to display additional information about the CD that may be available.

⏏ (Eject): Press to remove the CD.

Inserting a CD

With the printed side facing up, insert a disc into the CD slot until it is drawn in.

Removing a CD

Press ⏏.

The disc is pushed out of the CD slot.

If the disc is not removed after it is ejected, it is pulled back in after a few seconds.

Playing a CD or MP3 CD

Press the CD/AUX button if there is a disc in the player; it begins playing.

Information about the disc and current track is shown on the display depending on the data stored.

Selecting a CD Track

Using the control buttons:

Press SEEK ⏮ or SEEK ⏭ to select the previous or next track.

Turn the MENU/SELECT knob counterclockwise or clockwise to select the previous or next track.

Using the CD Menu:

1. Press the MENU/SELECT knob.
2. Select Tracks list.
3. Select the track.

Playing Tracks in Random Order

Press the MENU/SELECT knob and then set Shuffle Songs to On.

Fast Forward and Rewind

Press and hold SEEK ⏮ or SEEK ⏭ to fast forward or rewind within the current track.

Selecting an MP3 Track

Using the control buttons:

Press SEEK ⏮ or SEEK ⏭ to select the previous or next track.

Turn the MENU/SELECT knob counterclockwise or clockwise to select the previous or next track.

Using the CD Menu:

1. Press the MENU/SELECT knob.
2. Select Playlists/Folders.
3. Select the playlist or folder.
4. Select the track.

Searching for MP3 Tracks

It is normal for the search feature to take some time to display the information after reading the disc due to the amount of information stored on the disc. The infotainment system automatically switches to FM while the disc is being read.

Tracks can be searched by:

- Playlists
- Artists
- Albums
- Song Titles
- Genres
- Folder View

To search for tracks:

1. Press the MENU/SELECT knob.
2. Select Search.
3. Select: Playlists, Artists, Albums, Song Titles, Genres, or Folder View.
4. Select the track.

Auxiliary Devices

If equipped, the AUX input allows portable devices to connect to the vehicle using the 3.5 mm (1/8 in) input jack, the USB port, if equipped, or Bluetooth® wireless technology, if equipped.

Portable devices are controlled by using the menu system described in *Operation on page 7-3*.

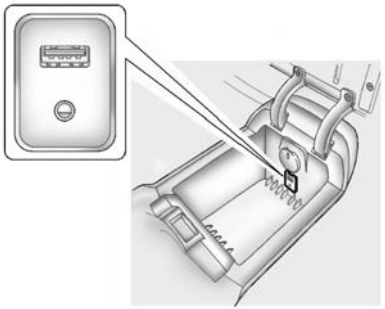

The AUX input is in the center console.

3.5 mm Jack

Connect a 3.5 mm (1/8 in) cable to the auxiliary input jack to use a portable audio player.

Playback of an audio device that is connected to the 3.5 mm jack can only be controlled using the controls on the device.

Adjusting the Volume

Turn the VOL/ ⏻ knob to adjust the volume of the infotainment system after the volume level has been set on the portable audio device.

USB Port

For vehicles with a USB port, the following devices may be connected and controlled by the infotainment system.

- iPods
- PlaysForSure Devices (PFD)
- USB Drives
- Zunes

Connecting and Controlling an iPod®

Not all iPods can be controlled by the infotainment system.

Connecting an iPod

Connect the iPod to the USB port using the cable that came with the device.

Searching for a Track

Tracks can be searched for by:

- Playlists
- Artists
- Albums
- Song Titles
- Podcasts
- Genres
- Audiobooks
- Composers

To search for tracks:

1. Press the MENU/SELECT knob.
2. Select Search.
3. Select: Playlists, Artists, Albums, Song Titles, Podcasts, Genres, Audiobooks, or Composers.
4. Select the track.

Shuffle

Press the MENU/SELECT knob and set Shuffle Songs (Random) to On or Off, then press the BACK ⇦ button to return to the main screen.

On: Plays tracks in the current folder in random order.

Off: Plays tracks in the current folder in sequential order.

Repeat

Press the MENU/SELECT knob and set Repeat to On or Off, then press the BACK ⇦ button to return to the main screen.

On: Repeats the current track.

Off: Starts playback from the beginning of the current track after the last track finishes.

Connecting and Controlling a PlaysForSure Device (PFD) or Zune®

Connecting a PFD or Zune

Connect the PFD or Zune to the USB port using the cable that came with the device.

Searching for a Track

Tracks can be searched for by:

- Playlists
- Artists
- Albums
- Song Titles
- Podcasts
- Genres

To search for tracks:

1. Press the MENU/SELECT knob.
2. Select Search.
3. Select: Playlists, Artists, Albums, Song Titles, Podcasts, or Genres.
4. Select the track.

Shuffle Functionality

Press the MENU/SELECT knob and set Shuffle Songs (Random) to On or Off.

On: Plays current tracks in random order.

Off: Plays current tracks in sequential order.

Repeat Functionality

Press the MENU/SELECT knob and set Repeat to On or Off.

Repeat On: Repeats the current track.

Repeat Off: Starts playback from the beginning of the current track after the last track finishes.

Connecting and Controlling a USB Drive

The infotainment system can only play back .mp3 and .wma files from a USB drive.

Only the first 10,000 songs are recognized on the device.

When a device is not supported, the message “No supported data found. You can safely disconnect the device” appears.

Connecting a USB Drive

Connect the USB drive to the USB port using the cable that came with the device.

Searching for a Track

It is normal for the search feature to take some time to display the information after reading the disc due to the amount of information stored on the disc.

Files that do not have any meta data stored in the ID3 tag display as Unknown.

Tracks can be searched for by:

- Playlists*
- Artists
- Albums
- Song Titles
- Genres
- Folder View

*This only displays if a playlist is found on the device.

To search for tracks:

1. Press the MENU/SELECT knob.
2. Select Search.
3. Select: Playlists, Artists, Albums, Song Titles, Genres, or Folder View.
4. Select the track.

Shuffle Functionality

Press the MENU/SELECT knob and set Shuffle Songs (Random) to On or Off.

On: Plays current tracks in random order.

Off: Plays current tracks in sequential order.

Repeat Functionality

Press the MENU/SELECT knob and set Repeat to On or Off.

Repeat On: Repeats the current track.

Repeat Off: Starts playback from the beginning of the current track after the last track finishes.

Connecting a Bluetooth® Device

Before a Bluetooth device can be connected to the infotainment system, it must first be paired to the system. Not all Bluetooth devices can be paired to the infotainment system. Before pairing the Bluetooth device, become familiar with its user guide for Bluetooth functions. The system only connects to Bluetooth devices that support A2DP (Advanced Audio Distribution Profile) version 1.2.

Pairing Information:

- Up to five devices can be paired to the system.
- The pairing process is disabled when the vehicle is moving.
- The infotainment system automatically links with the first available paired device in the order the device was paired.

- Only one paired device can be connected to the infotainment system at a time.
- Pairing should only need to be completed once, unless changes to the pairing information have been made or the device is deleted.

Bluetooth Setup Menu

The Bluetooth Setup menu can be accessed with or without a device attached to the USB port.

To select the Bluetooth Setup menu when a device is attached to the USB port and active:

1. Press the MENU/SELECT knob while in the iPod, Zune, PFD, or USB device main menu.
2. Select Bluetooth Music Setup.

To select the Bluetooth Music Setup menu when a device is not attached to the USB port, or when a device is attached to the USB port but not active:

1. Press the CD/AUX button until AUX is the active source.
2. Press the MENU/SELECT knob.
3. Select Bluetooth Music Setup.

To select the Bluetooth Music Setup menu when a Bluetooth device is connected and active:

1. Press the MENU/SELECT knob.
2. Select Bluetooth Music Setup.

Pairing a Device

1. Select Connect To New Device from the Bluetooth Music Setup menu.
2. The system asks a series of Yes/No questions to determine what type of device is being paired.
3. After the system determines what type of Bluetooth device is being paired, the Bluetooth device will need to be put into discovery mode.
4. Some devices may require a personal identification number (PIN) in order to complete the pairing process. Locate the device named “GMusicConnect” in the list on the Bluetooth device and follow the instructions on the device to enter the four-digit PIN provided by the infotainment system.

Connecting to a Device

Once a device is paired to the infotainment system, it can be connected to the infotainment system.

To connect a paired device when no other device is connected to the infotainment system:

1. Select the Select Device option from the Bluetooth Music Setup menu.

2. Select the new device.

To connect a paired device when another device is connected to the infotainment system:

1. Select the Select Device option from the Bluetooth Music Setup menu.
2. Select the new device.
3. The active device is disconnected from the system and the new device is connected.

Removing a Device

1. Select Remove Device from the Bluetooth Music Setup menu.
2. Select the device.
3. The device is removed from the system.

Before connecting to the removed device again, it will need to paired to the infotainment system.

Changing the PIN

To change the default PIN:

1. Select Change Default PIN from the Bluetooth Music Setup menu.
2. Select a pre-defined PIN, or select Other to create a PIN.

To create a PIN:

1. Select the length of the PIN.
2. Enter the character sequence.

Messages

The following messages may appear on the infotainment screen.

Poor Bluetooth Signal Quality: This message displays when the Bluetooth signal strength is low.

This Feature is Unavailable While Vehicle is Moving: This message displays when an action is not allowed while the vehicle is moving.

Controlling a Bluetooth® Device

Bluetooth devices that support AVRCP (Audio/Video Remote Control Profile) version 1.4 may be able to be controlled by the infotainment system.

Press and release SEEK ⏮ or SEEK ⏭ to skip tracks. Press and hold SEEK ⏮ or SEEK ⏭ to fast forward or fast reverse within a track.

Other Information

The Bluetooth® word mark and logos are owned by the Bluetooth® SIG, Inc. and any use of such marks by General Motors is under license. Other trademarks and trade names are those of their respective owners.

See *Radio Frequency Statement on page 13-12* for Federal Communications Commission and Industry Canada information.

Phone

Bluetooth (Overview)

For vehicles equipped with Bluetooth capability, the system can interact with many cell phones, allowing:

- Placement and receipt of calls in a hands-free mode.
- Sharing of the cell phone's address book or contact list with the vehicle.

To minimize driver distraction, before driving, and with the vehicle parked:

- Become familiar with the features of the cell phone. Organize the phone book and contact lists clearly and delete duplicate or rarely used entries. If possible, program speed dial or other shortcuts.
- Review the controls and operation of the infotainment system.
- Pair cell phone(s) to the vehicle. The system may not work with all cell phones. See "Pairing" in this section.
- If the cell phone has voice dialing capability, learn to use that feature to access the address book or contact list. See "Voice Pass-Thru" in this section.
- See "Storing and Deleting Phone Numbers" in this section.

⚠ Warning

When using a cell phone, it can be distracting to look too long or too often at the screen of the phone or the infotainment system. Taking your eyes off the road too long or too often could cause a crash resulting in injury or death. Focus your attention on driving.

Vehicles with a Bluetooth system can use a Bluetooth-capable cell phone with a Hands-Free Profile to make and receive phone calls. The infotainment system and voice recognition are used to control the system. The system can be used while in ON/RUN or ACC/ACCESSORY. The range of the Bluetooth system can be up to 9.1 m (30 ft). Not all phones support all functions and not all phones work with the Bluetooth system. See www.gm.com/bluetooth for more information about compatible phones.

Bluetooth Controls

Use the buttons on the infotainment system and the steering wheel to operate the Bluetooth system.

Steering Wheel Controls

/ (Push to Talk): Press to answer incoming calls, confirm system information, and start voice recognition.

/ (Mute/End Call): Press to end a call, reject a call, or cancel an operation.

Infotainment System Controls

If equipped, the infotainment system allows certain controls to be selected on the infotainment display.

For information about how to navigate the menu system using the infotainment controls, see *Operation on page 7-3*.

PHONE: Press to enter the Phone main menu.

Voice Recognition

The voice recognition system uses commands to control the system and dial phone numbers.

Noise: The system may not recognize voice commands if there is too much background noise.

When to Speak: A tone sounds to indicate that the system is ready for a voice command. Wait for the tone and then speak.

How to Speak: Speak clearly in a calm and natural voice.

Audio System

When using the Bluetooth system, sound comes through the vehicle's front audio system speakers and overrides the audio system. Use the VOL/ ⏻ knob during a call to change the volume level. The adjusted volume level remains in memory for later calls. The system maintains a minimum volume level.

Other Information

The Bluetooth® word mark and logos are owned by the Bluetooth® SIG, Inc. and any use of such marks by General Motors is under license. Other trademarks and trade names are those of their respective owners.

See *Radio Frequency Statement on page 13-12*.

Bluetooth (Infotainment Controls)

For information about how to navigate the menu system using the infotainment controls, see *Operation on page 7-3*.

Pairing

A Bluetooth-enabled cell phone must be paired to the Bluetooth system and then connected to the vehicle before it can be used. See your cell phone manufacturer's user guide for Bluetooth functions before pairing the cell phone. If a Bluetooth phone is not connected, calls will be made using OnStar Hands-Free Calling, if available. See *OnStar Overview on page 14-1*.

Pairing Information

- A Bluetooth phone with MP3 capability cannot be paired to the vehicle as a phone and an MP3 player at the same time.
- Up to five cell phones can be paired to the Bluetooth system.

- The pairing process is disabled when the vehicle is moving.
- Pairing only needs to be completed once, unless the pairing information on the cell phone changes or the cell phone is deleted from the system.
- Only one paired cell phone can be connected to the Bluetooth system at a time.
- If multiple paired cell phones are within range of the system, the system connects to the first available paired cell phone in the order that they were first paired to the system. To link to a different paired phone, see “Linking to a Different Phone” later in this section.

Pairing a Phone

1. Press the CONFIG button.
2. Select Phone Settings or Bluetooth Settings.
3. Select Bluetooth.
4. Select Pair Device (Phone). A four-digit Personal Identification Number (PIN) appears on the display. The PIN is used in Step 6.
5. Start the pairing process on the cell phone to be paired to the vehicle. See the cell phone manufacturer's user guide for information on this process.
6. Locate the device named “Your Vehicle” in the list on the cell phone. Follow the instructions on the cell phone to enter the PIN provided in Step 4. After the PIN is successfully entered, the system prompts you to provide a name for the paired cell phone. This name will be used to indicate which phones are paired and connected to the vehicle. The system responds with “<Phone name> has been successfully paired” after the pairing process is complete.
7. Repeat Steps 1−6 to pair additional phones.

Listing All Paired and Connected Phones

1. Press the CONFIG button.
2. Select Phone Settings or Bluetooth Settings.
3. Select Bluetooth.
4. Select Device List.

Deleting a Paired Phone

1. Press the CONFIG button.
2. Select Phone Settings or Bluetooth Settings.
3. Select Bluetooth.
4. Select Device List.
5. Select the phone to delete and follow the on screen prompts.

Linking to a Different Phone

To link to a different phone, the new phone must be in the vehicle and available to be connected to the Bluetooth system before the process is started.

1. Press the CONFIG button.

2. Select Phone Settings or Bluetooth Settings.
3. Select Bluetooth.
4. Select Device List.
5. Select the new phone to link to and follow the on screen prompts.

   If delete is selected, the highlighted phone will be deleted.

Making a Call Using Phone Book

For cell phones that support the phone book feature, the Bluetooth system can use the contacts stored on your cell phone to make calls. See your cell phone manufacturer‘s user guide or contact your wireless provider to find out if this feature is supported by your phone.

When a cell phone supports the phone book feature, the Phone Book and Call Lists menus are automatically available.

The Phone Book menu allows you to access the phone book stored in the cell phone to make a call.

The Call Lists menu allows you to access the phone numbers from the Incoming Calls, Outgoing Calls, and Missed Calls menus on your cell phone to make a call.

To make a call using the Phone Book menu:

1. Press the PHONE button once or twice.
2. Select Phone Book.
3. Search through the list by selecting the letter group the phone book entry begins with, or press the MENU/SELECT knob to scroll through the entire list of names/numbers in the phone book.
4. Select the name or number you want to call.

To make a call using the Call Lists menu:

1. Press the PHONE button once or twice.
2. Select Call Lists.
3. Select the Incoming Calls, Outgoing Calls, or Missed Calls list.
4. Select the name or number you want to call.

Making a Call

To make a call:

1. Press the PHONE button once or twice.
2. Enter the character sequence. See “Entering a Character Sequence” in *Operation on page 7-3*.
3. Select Call to start dialing the number.

Accepting or Declining a Call

When an incoming call is received, the infotainment system mutes and a ring tone is heard in the vehicle.

Accepting a Call

Turn the MENU/SELECT knob to “Answer” and press the MENU/SELECT knob to accept the call.

Declining a Call

Turn the MENU/SELECT knob to “Decline” and press the MENU/SELECT knob to decline the call.

Call Waiting

Call waiting must be supported on the Bluetooth phone and enabled by the wireless service carrier to work.

Accepting a Call

Turn the MENU/SELECT knob to “Answer” and press the MENU/SELECT knob to accept the call.

Declining a Call

Turn the MENU/SELECT knob to “Decline” and press the MENU/SELECT knob to decline the call.

Switching Between Calls (Call Waiting Calls Only)

To switch between calls:

1. Turn or press the MENU/SELECT knob.
2. Select Switch Call from the menu.

Conference Calling

Conference calling and three-way calling must be supported on the Bluetooth phone and enabled by the wireless service carrier to work.

To start a conference while in a current call:

1. Turn or press the MENU/SELECT knob.
2. Select Enter Number.
3. Enter the character sequence then select Call. See “Entering a Character Sequence” in *Operation on page 7-3*.
4. After the call has been placed, turn or press the MENU/SELECT knob and choose Merge Calls.
5. To add more callers to the conference call, repeat Steps 1−4. The number of callers that can be added is limited by your wireless service carrier.

Ending a Call

Turn or press the MENU/SELECT knob and select Hang Up.

Muting a Call

To Mute a Call

Turn or press the MENU/SELECT knob and select Mute Call.

To Cancel Mute

Turn or press the MENU/SELECT knob and select Mute Call.

Dual Tone Multi-Frequency (DTMF) Tones

The in-vehicle Bluetooth system can send numbers during a call. This is used when calling a menu-driven phone system.

1. Turn or press the MENU/SELECT knob and select Enter Number.
2. Enter the character sequence. See “Entering a Character Sequence” in *Operation on page 7-3*.

Bluetooth (Voice Recognition)

Using Voice Recognition

To use voice recognition, press the ✆ / button on the steering wheel. Use the commands below for the various voice features. For additional information, say “Help” while you are in a voice recognition menu.

Pairing

A Bluetooth-enabled cell phone must be paired to the Bluetooth system and then connected to the vehicle before it can be used. See your cell phone manufacturer's user guide for Bluetooth functions before pairing the cell phone. If a Bluetooth phone is not connected, calls will be made using OnStar Hands-Free Calling, if available. See *OnStar Overview on page 14-1*.

Pairing Information

- A Bluetooth phone with MP3 capability cannot be paired to the vehicle as a phone and an MP3 player at the same time.
- Up to five cell phones can be paired to the Bluetooth system.
- The pairing process is disabled when the vehicle is moving.
- Pairing only needs to be completed once, unless the pairing information on the cell phone changes or the cell phone is deleted from the system.
- Only one paired cell phone can be connected to the Bluetooth system at a time.
- If multiple paired cell phones are within range of the system, the system connects to the first available paired cell phone in the order that they were first paired to the system. To link to a different paired phone, see “Linking to a Different Phone” later in this section.

Pairing a Phone

1. Press ✆ / . The system responds “Ready,” followed by a tone.
2. Say “Bluetooth.” This command can be skipped.
3. Say “Pair.” The system responds with instructions and a four-digit Personal Identification Number (PIN). The PIN is used in Step 5.

4. Start the pairing process on the cell phone that you want to pair. For help with this process, see your cell phone manufacturer's user guide.
5. Locate the device named “Your Vehicle” in the list on the cell phone. Follow the instructions on the cell phone to enter the PIN provided in Step 3. After the PIN is successfully entered, the system prompts you to provide a name for the paired cell phone. This name will be used to indicate which phones are paired and connected to the vehicle. The system responds with “<Phone name> has been successfully paired” after the pairing process is complete.
6. Repeat Steps 1−5 to pair additional phones.

Listing All Paired and Connected Phones

The system can list all cell phones paired to it. If a paired cell phone is also connected to the vehicle, the system responds with “is connected” after that phone name.

1. Press ✆ / ⁂. The system responds “Ready,” followed by a tone.
2. Say “Bluetooth.”
3. Say “List.”

Deleting a Paired Phone

If the phone name you want to delete is unknown, see “Listing All Paired and Connected Phones.”

1. Press ✆ / ⁂. The system responds “Ready,” followed by a tone.
2. Say “Bluetooth.”
3. Say “Delete.” The system asks for which phone to delete.
4. Say the name of the phone you want to delete.

Connecting to a Different Phone

To connect to a different cell phone, the Bluetooth system looks for the next available cell phone in the order in which all the available cell phones were paired. Depending on which cell phone you want to connect to, you may have to use this command several times.

1. Press ✆ / ⁂. The system responds “Ready,” followed by a tone.
2. Say “Bluetooth.”
3. Say “Change phone.”
   - If another cell phone is found, the response will be “<Phone name> is now connected.”
   - If another cell phone is not found, the original phone remains connected.

Storing and Deleting Phone Numbers

The system can store up to 30 phone numbers as name tags in the Hands-Free Directory that is shared between the Bluetooth and OnStar systems.

The following commands are used to delete and store phone numbers.

Store: This command will store a phone number, or a group of numbers as a name tag.

Digit Store: This command allows a phone number to be stored as a name tag by entering the digits one at a time.

Delete: This command is used to delete individual name tags.

Delete All Name Tags: This command deletes all stored name tags in the Hands-Free Calling Directory and the Destinations Directory.

Using the "Store" Command

1. Press ✆ / ⁂. The system responds "Ready," followed by a tone.
2. Say "Store."
3. Say the phone number or group of numbers you want to store all at once with no pauses, then follow the directions given by the system to save a name tag for this number.

Using the "Digit Store" Command

If an unwanted number is recognized by the system, say "Clear" at any time to clear the last number.

To hear all of the numbers recognized by the system, say "Verify" at any time.

1. Press ✆ / ⁂. The system responds "Ready," followed by a tone.
2. Say "Digit Store."
3. Say each digit, one at a time, that you want to store. After each digit is entered, the system repeats back the digit it heard followed by a tone. After the last digit has been entered, say "Store," and then follow the directions given by the system to save a name tag for this number.

Using the "Delete" Command

1. Press ✆ / ⁂. The system responds "Ready," followed by a tone.
2. Say "Delete."
3. Say the name tag you want to delete.

Using the "Delete All Name Tags" Command

This command deletes all stored name tags in the Hands-Free Calling Directory and the Destinations Directory.

To delete all name tags:

1. Press ✆ / ⌇. The system responds “Ready,” followed by a tone.
2. Say “Delete all name tags.”

Listing Stored Numbers

The list command will list all the stored numbers and name tags.

Using the “List” Command

1. Press ✆ / ⌇. The system responds “Ready,” followed by a tone.
2. Say “Directory.”
3. Say “Hands-Free Calling.”
4. Say “List.”

Making a Call

Calls can be made using the following commands.

Dial or Call: The dial or call command can be used interchangeably to dial a phone number or a stored name tag.

Digit Dial: This command allows a phone number to be dialed by entering the digits one at a time.

Redial: This command is used to dial the last number used on the cell phone.

Using the “Dial” or “Call” Command

1. Press ✆ / ⌇. The system responds “Ready,” followed by a tone.
2. Say “Dial” or “Call.”
3. Say the entire number without pausing or say the name tag.

Once connected, the person called will be heard through the audio speakers.

Calling 911 Emergency

1. Press ✆ / ⌇. The system responds “Ready,” followed by a tone.
2. Say “Dial” or “Call.”
3. Say “911.”
4. Say "Dial." System responds: "OK, dialing 911."

Using the “Digit Dial” Command

The digit dial command allows a phone number to be dialed by entering the digits one at a time. After each digit is entered, the system repeats back the digit it heard followed by a tone.

If an unwanted number is recognized by the system, say “Clear” at any time to clear the last number.

To hear all of the numbers recognized by the system, say “Verify” at any time.

1. Press ✆ / ⌇. The system responds “Ready,” followed by a tone.
2. Say “Digit Dial.”
3. Say each digit, one at a time, that you want to dial. After each digit is entered, the system repeats back the digit it heard

followed by a tone. After the last digit has been entered, say “Dial.”

Once connected, the person called will be heard through the audio speakers.

Using the “Re-dial” Command

1. Press ✆ / ⌇. The system responds “Ready,” followed by a tone.
2. After the tone, say “Redial.” The system dials the last number called from the connected cell phone.

Once connected, the person called will be heard through the audio speakers.

Receiving a Call

When an incoming call is received, the audio system mutes and a ring tone is heard in the vehicle.

- Press ✆ / ⌇ to answer the call.
- Press ✆ / ⌇ to ignore a call.

Call Waiting

Call waiting must be supported on the cell phone and enabled by the wireless service carrier.

- Press ✆ / ⌇ to answer an incoming call when another call is active. The original call is placed on hold.
- Press ✆ / ⌇ again to return to the original call.
- To ignore the incoming call, no action is required.
- Press ✆ / ⌇ to disconnect the current call and switch to the call on hold.

Three-Way Calling

Three-way calling must be supported on the cell phone and enabled by the wireless service carrier.

1. While on a call, press ✆ / ⌇.
2. Say “Three-way call.”
3. Use the dial or call command to dial the number of the third party to be called.
4. Once the call is connected, press ✆ / ⌇ to link all callers together.

Ending a Call

Press ✆ / ⌇ to end a call.

Muting a Call

During a call, all sounds from inside the vehicle can be muted so that the person on the other end of the call cannot hear them.

To mute a call, press ✆ / ⌇ , and then say “Mute Call.”

To cancel mute, press ✆ / ⌇ , and then say “Un-mute Call.”

Transferring a Call

Audio can be transferred between the Bluetooth system and the cell phone.

The cell phone must be paired and connected with the Bluetooth system before a call can be transferred. The connection process can take up to two minutes after the ignition is turned to ON/RUN.

To Transfer Audio from the Bluetooth System to a Cell Phone

During a call with the audio in the vehicle:

1. Press ✆ / 🗣.
2. Say “Transfer Call.”

To Transfer Audio to the Bluetooth System from a Cell Phone

During a call with the audio on the cell phone, press ✆ / 🗣. The audio transfers to the vehicle. If the audio does not transfer to the vehicle, use the audio transfer feature on the cell phone. See your cell phone manufacturer's user guide for more information.

Voice Pass-Thru

Voice pass-thru allows access to the voice recognition commands on the cell phone. See your cell phone manufacturer's user guide to see if the cell phone supports this feature.

To access contacts stored in the cell phone:

1. Press ✆ / 🗣. The system responds “Ready,” followed by a tone.
2. Say “Bluetooth.” This command can be skipped.
3. Say “Voice.” The system responds “OK, accessing <phone name>.”

The cell phone's normal prompt messages will go through their cycle according to the phone's operating instructions.

Dual Tone Multi-Frequency (DTMF) Tones

The Bluetooth system can send numbers and the numbers stored as name tags during a call. You can use this feature when calling a menu-driven phone system. Account numbers can also be stored for use.

Sending a Number or Name Tag During a Call

1. Press ✆ / 🗣. The system responds “Ready,” followed by a tone.
2. Say “Dial.”
3. Say the number or name tag to send.

Clearing the System

Unless information is deleted out of the in-vehicle Bluetooth system, it will be retained indefinitely. This includes all saved name tags in the phone book and phone pairing information. See the previous sections on “Deleting a Paired Phone” and “Deleting Name Tags.”

✍ NOTES

Climate Controls

Climate Control Systems
Climate Control Systems 8-1

Air Vents
Air Vents 8-3

Maintenance
Passenger Compartment Air Filter 8-4

Climate Control Systems

The heating, cooling, defrosting, and ventilation for the vehicle can be controlled with this system.

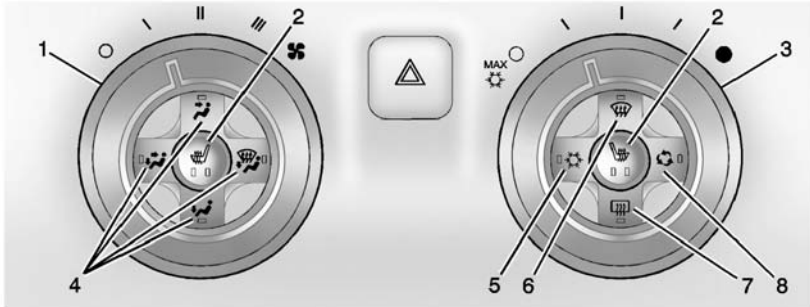

1. Fan Control
2. Heated Seats (If Equipped)
3. Temperature Control
4. Air Delivery Mode Controls
5. Air Conditioning (If Equipped)
6. Defrost
7. Rear Window Defogger
8. Recirculation

(Fan Control): Turn to increase or decrease the fan speed. Turn the knob to O to turn the fan off.

Temperature Control: Turn to increase or decrease the temperature inside the vehicle.

Maximum cooling occurs when the temperature knob is turned to MAX and the air conditioning system is turned on and air is recirculated inside the vehicle.

Air Delivery Mode Control: To change the current mode, press one of the following:

(Vent): Air is directed to the instrument panel outlets.

(Bi-Level): Air is directed to the instrument panel outlets and the floor outlets.

(Floor): Air is directed to the floor outlets.

(Defog): Clears the windows of fog or moisture. Air is directed to the windshield and floor outlets.

(Defrost): Clears the windshield of fog or frost more quickly. Air is directed to the windshield and side window outlets.

For best results, clear all snow and ice from the windshield before defrosting.

Do not drive the vehicle until all windows are clear.

Air Conditioning

(Air Conditioning, If Equipped): Press to turn the air conditioning on or off. An indicator light turns on. If the fan is turned off or the outside temperature falls below freezing, the air conditioning will not work.

The air conditioning might automatically come on when is selected.

(Recirculation): Press to turn on the recirculation. An indicator light comes on. Air is recirculated inside the vehicle. It helps to quickly cool the air inside the vehicle or reduce the outside air and odors that may enter.

Operation in the recirculation mode while the air conditioner is off increases humidity and may cause the windows to fog.

Recirculation is not available in the defrost or defog modes.

To improve fuel efficiency and to cool the vehicle faster, recirculation may be automatically selected in warm weather. The recirculation light will not come on. Press the to select recirculation; press it again to select outside air.

Rear Window Defogger

(Rear Defogger): Press to turn the rear window defogger on or off. An indicator light on the button comes on to show that the rear window defogger is on. The defogger turns off if the ignition is turned to ACC/ACCESSORY or LOCK/OFF.

Do not drive the vehicle until all windows are clear.

⚠ Caution

Do not use a razor blade or sharp object to clear the inside rear window. Do not adhere anything to the defogger grid lines in the rear glass. These actions may damage the rear defogger. Repairs would not be covered by the vehicle warranty.

/ (Heated Seats, If Equipped): Press to turn on or off. See *Heated Front Seats on page 3-6*.

Air Vents

Use the air outlets in the center and on the side of the instrument panel to direct the airflow. Use the thumbwheels near the center air outlets to direct airflow to the left or right.

Operation Tips

- In defog or defrost mode, warm air flows from some air outlets. To improve side window defogging or defrosting, direct side air outlets toward the side windows.
- Clear away any ice, snow, or leaves from air inlets at the base of the windshield that could block the flow of air into the vehicle.
- Keep the path under the front seats clear of objects to help circulate the air inside of the vehicle more effectively.
- Use of non-GM approved hood deflectors can adversely affect the performance of the system. Check with your dealer before adding equipment to the outside of the vehicle.

Maintenance

Passenger Compartment Air Filter

The passenger compartment air filter reduces most of the pollen and dust from the air that may enter the vehicle. The filter will need to be replaced periodically. See *Maintenance Schedule on page 11-2*.

Using the climate control system without an air filter installed is not recommended. Water or other debris could enter the system and result in leaks or noises. Always install a new filter when removing the old filter.

For more information on filter replacement, see your dealer.

Driving and Operating

Driving Information
Distracted Driving 9-2
Defensive Driving 9-3
Drunk Driving 9-3
Control of a Vehicle 9-3
Braking 9-3
Steering 9-4
Off-Road Recovery 9-5
Loss of Control 9-5
Track Events and Competitive Driving 9-6
Driving on Wet Roads 9-10
Highway Hypnosis 9-11
Hill and Mountain Roads 9-11
Winter Driving 9-12
If the Vehicle Is Stuck 9-13
Vehicle Load Limits 9-14

Starting and Operating
New Vehicle Break-In 9-18
Ignition Positions 9-19
Starting the Engine 9-21
Engine Heater 9-22
Retained Accessory Power (RAP) 9-23
Shifting Into Park 9-24
Shifting out of Park 9-25
Parking (Manual Transmission) 9-26
Parking over Things That Burn 9-26
Active Fuel Management® . . . 9-27

Engine Exhaust
Engine Exhaust 9-27
Running the Vehicle While Parked 9-28

Automatic Transmission
Automatic Transmission 9-28
Manual Mode 9-31

Manual Transmission
Manual Transmission 9-34

Brakes
Antilock Brake System (ABS) 9-36
Parking Brake 9-37
Brake Assist 9-38
Hill Start Assist (HSA) 9-38

Ride Control Systems
Traction Control/Electronic Stability Control 9-38
Competitive Driving Mode . . . 9-40
Limited-Slip Rear Axle 9-44
Selective Ride Control 9-44

Cruise Control
Cruise Control 9-45

Driver Assistance Systems
Parking Assist 9-48
Rear Vision Camera (RVC) 9-49

Fuel
Fuel 9-51
California Fuel Requirements 9-53
Fuels in Foreign Countries . . . 9-53
Fuel Additives 9-53
Filling the Tank 9-53
Filling a Portable Fuel Container 9-55

Trailer Towing
General Towing Information 9-55
Driving Characteristics and Towing Tips 9-55

Trailer Towing (ZL1 or Z/28) 9-59
Trailer Towing (Except ZL1 or Z/28) 9-59
Towing Equipment 9-60

Conversions and Add-Ons
Add-On Electrical Equipment 9-61

Driving Information

Distracted Driving

Distraction comes in many forms and can take your focus from the task of driving. Exercise good judgment and do not let other activities divert your attention away from the road. Many local governments have enacted laws regarding driver distraction. Become familiar with the local laws in your area.

To avoid distracted driving, always keep your eyes on the road, hands on the wheel, and mind on the drive.

- Do not use a phone in demanding driving situations. Use a hands-free method to place or receive necessary phone calls.
- Watch the road. Do not read, take notes, or look up information on phones or other electronic devices.
- Designate a front seat passenger to handle potential distractions.
- Become familiar with vehicle features before driving, such as programming favorite radio stations and adjusting climate control and seat settings. Program all trip information into any navigation device prior to driving.
- Wait until the vehicle is parked to retrieve items that have fallen to the floor.
- Stop or park the vehicle to tend to children.
- Keep pets in an appropriate carrier or restraint.
- Avoid stressful conversations while driving, whether with a passenger or on a cell phone.

⚠ Warning

Taking your eyes off the road too long or too often could cause a crash resulting in injury or death. Focus your attention on driving.

Refer to the infotainment section for more information on using that system and the navigation system, if equipped, including pairing and using a cell phone.

Defensive Driving

Defensive driving means “always expect the unexpected.” The first step in driving defensively is to wear the safety belt. See *Safety Belts on page 3-8*.

- Assume that other road users (pedestrians, bicyclists, and other drivers) are going to be careless and make mistakes. Anticipate what they might do and be ready.
- Allow enough following distance between you and the driver in front of you.
- Focus on the task of driving.

Drunk Driving

Death and injury associated with drinking and driving is a global tragedy.

⚠ Warning

Drinking and then driving is very dangerous. Your reflexes, perceptions, attentiveness, and judgment can be affected by even a small amount of alcohol. You can have a serious — or even fatal — collision if you drive after drinking.

Do not drink and drive or ride with a driver who has been drinking. Ride home in a cab; or if you are with a group, designate a driver who will not drink.

Control of a Vehicle

Braking, steering, and accelerating are important factors in helping to control a vehicle while driving.

Braking

Braking action involves perception time and reaction time. Deciding to push the brake pedal is perception time. Actually doing it is reaction time.

Average driver reaction time is about three-quarters of a second. In that time, a vehicle moving at 100 km/h (60 mph) travels 20 m (66 ft), which could be a lot of distance in an emergency.

Helpful braking tips to keep in mind include:

- Keep enough distance between you and the vehicle in front of you.
- Avoid needless heavy braking.
- Keep pace with traffic.

If the engine ever stops while the vehicle is being driven, brake normally but do not pump the brakes. Doing so could make the pedal harder to push down. If the engine stops, there will be some power brake assist but it will be used when the brake is applied. Once the power assist is used up, it can take longer to stop and the brake pedal will be harder to push.

Steering

Electric Power Steering

If the vehicle has electric power steering, it does not have power steering fluid. Regular maintenance is not required.

If power steering assist is lost due to a system malfunction, the vehicle can be steered, but may require increased effort. See your dealer if there is a problem.

If the steering wheel is turned until it reaches the end of its travel, and is held against that position for an extended period of time, power steering assist may be reduced.

If the steering assist is used for an extended period of time, power assist may be reduced.

Normal use of the power steering assist should return when the system cools down.

See specific vehicle steering messages under *Vehicle Messages on page 5-32*.

Hydraulic Power Steering

If the vehicle has hydraulic power steering, it may require maintenance. See *Power Steering Fluid (L99, LS3, ZL1 and Z/28) on page 10-36* or *Power Steering Fluid (LFX) on page 10-36*.

If power steering assist is lost because the engine stops or because of a system malfunction, the vehicle can be steered but may required increased effort. See your dealer if there is a problem.

⚠ Caution

If the steering wheel is turned until it reaches the end of its travel, and is held in that position for more than 15 seconds, damage may occur to the power steering system and there may be loss of power steering assist.

Curve Tips

- Take curves at a reasonable speed.
- Reduce speed before entering a curve.
- Maintain a reasonable steady speed through the curve.
- Wait until the vehicle is out of the curve before accelerating gently into the straightaway.

Steering in Emergencies

- There are some situations when steering around a problem may be more effective than braking.
- Holding both sides of the steering wheel allows you to turn 180 degrees without removing a hand.
- The Antilock Brake System (ABS) allows steering while braking.

Off-Road Recovery

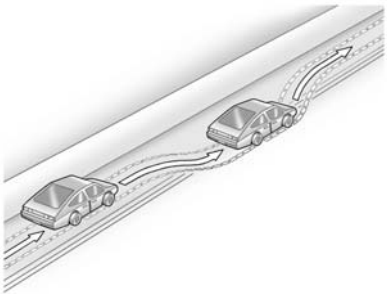

The vehicle's right wheels can drop off the edge of a road onto the shoulder while driving. Follow these tips:

1. Ease off the accelerator and then, if there is nothing in the way, steer the vehicle so that it straddles the edge of the pavement.
2. Turn the steering wheel about one-eighth of a turn, until the right front tire contacts the pavement edge.
3. Turn the steering wheel to go straight down the roadway.

Loss of Control

Skidding

There are three types of skids that correspond to the vehicle's three control systems:

- Braking Skid — wheels are not rolling.
- Steering or Cornering Skid — too much speed or steering in a curve causes tires to slip and lose cornering force.
- Acceleration Skid — too much throttle causes the driving wheels to spin.

Defensive drivers avoid most skids by taking reasonable care suited to existing conditions, and by not overdriving those conditions. But skids are always possible.

If the vehicle starts to slide, follow these suggestions:

- Ease your foot off the accelerator pedal and steer the way you want the vehicle to go. The vehicle may straighten out. Be ready for a second skid if it occurs.
- Slow down and adjust your driving according to weather conditions. Stopping distance can be longer and vehicle control can be affected when traction is reduced by water, snow, ice, gravel, or other

material on the road. Learn to recognize warning clues — such as enough water, ice, or packed snow on the road to make a mirrored surface — and slow down when you have any doubt.

- Try to avoid sudden steering, acceleration, or braking, including reducing vehicle speed by shifting to a lower gear. Any sudden changes could cause the tires to slide.

Remember: Antilock brakes help avoid only the braking skid.

Track Events and Competitive Driving

Track events or competitive driving may affect the vehicle warranty. See the warranty manual before using the vehicle for racing or other competitive driving.

Engine Oil

> **⚠ Caution**
>
> If you use the vehicle for racing or other competitive driving, the engine may use more oil than it would with normal use. Low oil levels can damage the engine. For information on how to add oil, see *Engine Oil on page 10-15*.
>
> Be sure to check the oil level often during racing or other competitive driving and keep the level at or near the upper mark that shows the proper operating range on the engine oil dipstick.

For track events or competitive driving, it is recommended that the brake fluid be replaced with a high performance brake fluid that has a dry boiling point greater than 279°C (534°F). After conversion to the high performance brake fluid, follow the brake fluid service recommendations outlined by the fluid manufacturer. Do not use silicone or DOT-5 brake fluids.

> **⚠ Caution**
>
> Extended track operation without this kit installed may result in a low oil level and could result in engine damage.

1LE comes with an oil control kit that should be installed for track use only, to ensure proper oil control and prevent engine damage. This is not for street use. This kit may also be purchased from your dealer.

Coolant

If operating a Z/28 on a closed course during hot temperatures, reduce the coolant/water mixture to a 30/70 mix and increase under hood airflow by removing the water deflector on the engine side of the hood scoop.

Load Limit

ZL1, 1LE, and Z/28: For racing and competitive driving, the vehicle load should be limited to the driver only and no cargo. The tires should be inflated to at least 180 kPa (26 psi).

Rear Axle Fluid

The rear axle fluid temperatures may be higher than when driving in severe conditions. Drain and refill with new fluid after the first racing or competitive driving event, and then after every 24 hours of racing or competitive driving. See *Recommended Fluids and Lubricants on page 11-12*.

⚠ Caution

During a first time track or racing event, high rear axle temperatures can occur. Damage could be caused to the rear axle and would not be covered by the vehicle warranty. Do not drive as

(Continued)

Caution (Continued)

long or as fast the first time the vehicle is driven on the track or raced.

For extended track use, GM recommends installing a rear differential cooler to protect the rear axle. This excludes the ZL1 and Z/28 as they have a rear differential cooler as standard equipment.

Brake Burnishing

To prepare the Camaro ZL1, 1LE, and Z/28 brake systems for track events and racing, complete the appropriate high performance brake burnishing procedure described below.

ZL1 and 1LE Brake Burnishing

New brake pads must be burnished before racing or other competitive driving.

⚠ Caution

These procedures are specific to the ZL1 or Camaro SS brake package. This procedure should not be run on other Camaro models as damage may result.

⚠ Caution

The new vehicle break-in period should be completed before performing the brake burnish procedure or damage may occur to the powertrain/engine. See *New Vehicle Break-In on page 9-18*.

When performed as instructed, this procedure will not damage the brakes. During the burnishing procedure, the brake pads will smoke and produce an odor. The braking force and pedal travel may

increase. After the procedure is complete, the brake pads may appear white at the rotor contact.

Run this procedure in a safe manner and in compliance with all local and state ordinances/laws regarding motor vehicle operation. Run this procedure only on dry pavement.

Racing/Track Brake Burnishing Procedure

> **⚠ Caution**
>
> Brake pedal fade will occur during this track burnish procedure and can cause brake pedal travel and force to increase. This could extend stopping distance until the brakes are fully burnished.

1. Apply the brakes 25 times starting at 100 km/h (60 mph) to 50 km/h (30 mph) while decelerating at 0.4 g. This is a medium brake application. Drive for at least 1 km (0.6 mi) between applying the brakes. This first step may be skipped if there are more than 320 km (200 mi) on the brake pads.
2. Repeatedly apply the brakes from 100 km/h (60 mph) to 25 km/h (15 mph) while decelerating at 0.8 g. This is a hard brake application, without activating the Antilock Brake System (ABS). Drive for at least 1 km (0.6 mi) between stops. Repeat until the brake pedal travel starts to increase. Depending on conditions, this should take no longer than 25 brake applications.
3. Cool down: Drive at 100 km/h (60 mph) for approximately 15 km (10 mi) without using the brakes.
4. Apply the brakes 25 times from 100 km/h (60 mph) to 50 km/h (30 mph) while decelerating at 0.4 g. This is a medium brake application. Drive for at least 1 km (0.6 mi) between applications.

Z/28 Brake Burnishing

> **⚠ Caution**
>
> These procedures are specific to the Z/28 with ceramic brake rotors. These procedures should not be run on other Camaro models as damage may result.

> **⚠ Caution**
>
> The new vehicle break-in period should be completed before performing the brake burnish procedure or damage may occur to the powertrain/engine. See *New Vehicle Break-In on page 9-18*.

When performed as instructed, these procedures will not damage the brakes. During the burnishing procedure, the brake pads will smoke and produce an odor. The braking force and pedal travel may increase. After the procedure is complete, the brake pads may appear white at the rotor contact.

Street High Performance Brake Burnishing Procedure

Perform this procedure on dry pavement only, in a safe manner, and in compliance with all local and state ordinances/laws regarding motor vehicle operation.

1. From a stop, accelerate as rapidly as possible without activating traction control to a speed of 100 km/h (60 mph).
2. Use enough pedal force to completely stop the vehicle in four to five seconds. If ABS activates, braking is too hard.
3. Repeat Steps 1 and 2 five times. This should take about 10 minutes.
4. After completing the five stops, cool the brakes by driving for 8 km (5 mi) at 100 km/h (60 mph).

As with all high performance brake systems, some amount of brake squeal is normal.

Racing/Track Brake Burnishing Procedure

To prepare the Z/28 brake system for track events and racing, the street high performance brake burnish as described previously should be completed.

In addition to completing the street high performance brake burnishing procedure, the following procedure needs to be completed to make the Z/28 brake system ready for track events and racing.

This procedure should only be run on a track and only on dry pavement.

⚠ Caution

Brake pedal fade will occur during this track burnish procedure and can cause brake pedal travel and force to increase. This could extend stopping distance until the brakes are fully burnished.

1. Drive a normal first lap, not too aggressively.
2. Laps 2 and 3 should be gradually driven faster and more aggressively, while allowing for reduced brake output and increased stopping distance due to brake fade.
3. Drive Lap 4 near full speed, while allowing for reduced brake output and increased stopping distance due to brake fade.
4. Laps 5 and 6 should be cool down laps.
5. Lap 7 should be normal driving or an easy out lap.

Wheel Alignment

Z/28 Racing Alignment

If the vehicle has the Z/28 package, the racing and competitive driving wheel alignment settings can be set as follows for increased handling performance:

⚠ Caution

Using these wheel alignment settings may cause excessive tire wear. Only use these wheel alignment settings for racing or competitive driving. Excessive tire wear is not covered under the vehicle warranty.

Front Alignment Specification

- Caster: 5.9 +/- 0.50 deg.
- Camber: -1.5 +/- 0.50 deg.
- Total or Sum Toe: 0.1 +/- 0.20 deg.

Rear Alignment Specification

- Camber: -1 +/- 0.50 deg.
- Total or Sum Toe: 0.1 +/- 0.20 deg.
- Thrust Angle: 0 +/- 0.20 deg.

Driving on Wet Roads

Rain and wet roads can reduce vehicle traction and affect your ability to stop and accelerate. Always drive slower in these types of driving conditions and avoid driving through large puddles and deep-standing or flowing water.

⚠ Warning

Wet brakes can cause crashes. They might not work as well in a quick stop and could cause pulling to one side. You could lose control of the vehicle.

(Continued)

Warning (Continued)

After driving through a large puddle of water or a car/vehicle wash, lightly apply the brake pedal until the brakes work normally.

Flowing or rushing water creates strong forces. Driving through flowing water could cause the vehicle to be carried away. If this happens, you and other vehicle occupants could drown. Do not ignore police warnings and be very cautious about trying to drive through flowing water.

Hydroplaning

Hydroplaning is dangerous. Water can build up under the vehicle's tires so they actually ride on the water. This can happen if the road is wet enough and you are going fast enough. When the vehicle is hydroplaning, it has little or no contact with the road.

There is no hard and fast rule about hydroplaning. The best advice is to slow down when the road is wet.

Other Rainy Weather Tips

Besides slowing down, other wet weather driving tips include:

- Allow extra following distance.
- Pass with caution.
- Keep windshield wiping equipment in good shape.
- Keep the windshield washer fluid reservoir filled.
- Have good tires with proper tread depth. See *Tires on page 10-56*.
- Turn off cruise control.

Highway Hypnosis

Always be alert and pay attention to your surroundings while driving. If you become tired or sleepy, find a safe place to park the vehicle and rest.

Other driving tips include:

- Keep the vehicle well ventilated.
- Keep the interior temperature cool.
- Keep your eyes moving — scan the road ahead and to the sides.
- Check the rearview mirror and vehicle instruments often.

Hill and Mountain Roads

Driving on steep hills or through mountains is different than driving on flat or rolling terrain. Tips for driving in these conditions include:

- Keep the vehicle serviced and in good shape.
- Check all fluid levels and brakes, tires, cooling system, and transmission.
- Shift to a lower gear when going down steep or long hills.

⚠ Warning

Using the brakes to slow the vehicle on a long downhill slope can cause brake overheating, can reduce brake performance, and could result in a loss of braking. Shift the transmission to a lower gear to let the engine assist the brakes on a steep downhill slope.

⚠ Warning

Coasting downhill in N (Neutral) or with the ignition off is dangerous. This can cause overheating of the brakes and loss of steering. Always have the engine running and the vehicle in gear.

- Stay in your own lane. Do not swing wide or cut across the center of the road. Drive at speeds that let you stay in your own lane.
- Be alert on top of hills; something could be in your lane (stalled car, accident).
- Pay attention to special road signs (falling rocks area, winding roads, long grades, passing or no-passing zones) and take appropriate action.

Winter Driving

Driving on Snow or Ice

Drive carefully when there is snow or ice between the tires and the road, creating less traction or grip. Wet ice can occur at about 0°C (32°F) when freezing rain begins to fall, resulting in even less traction. Avoid driving on wet ice or in freezing rain until roads can be treated with salt or sand.

Drive with caution, whatever the condition. Accelerate gently so traction is not lost. Accelerating too quickly causes the wheels to spin and makes the surface under the tires slick, so there is even less traction.

Traction Control should be turned on. See *Traction Control/Electronic Stability Control on page 9-38*.

The Antilock Brake System (ABS) improves vehicle stability during hard stops on slippery roads, but apply the brakes sooner than when on dry pavement. See *Antilock Brake System (ABS) on page 9-36*.

Allow greater following distance on any slippery road and watch for slippery spots. Icy patches can occur on otherwise clear roads in shaded areas. The surface of a curve or an overpass can remain icy when the surrounding roads are clear. Avoid sudden steering maneuvers and braking while on ice.

Turn off cruise control on slippery surfaces.

Blizzard Conditions

Being stuck in snow can be a serious situation. Stay with the vehicle unless there is help nearby. If possible, use Roadside Assistance. See *Roadside Assistance Program on page 13-5*. To get help and keep everyone in the vehicle safe:

- Turn on the hazard warning flashers.
- Tie a red cloth to an outside mirror.

⚠ Warning

Snow can trap engine exhaust under the vehicle. This may cause exhaust gases to get inside. Engine exhaust contains carbon monoxide (CO) which

(Continued)

Warning (Continued)

cannot be seen or smelled. It can cause unconsciousness and even death.

If the vehicle is stuck in the snow:

- Clear away snow from around the base of your vehicle, especially any that is blocking the exhaust pipe.
- Check again from time to time to be sure snow does not collect there.
- Open a window about 5 cm (2 in) on the side of the vehicle that is away from the wind to bring in fresh air.
- Fully open the air outlets on or under the instrument panel.
- Adjust the climate control system to a setting that circulates the air inside the

(Continued)

Warning (Continued)

vehicle and set the fan speed to the highest setting. See "Climate Control Systems".

For more information about carbon monoxide, see *Engine Exhaust on page 9-27*.

To save fuel, run the engine for only short periods as needed to warm the vehicle and then shut the engine off and close the window most of the way to save heat. Repeat this until help arrives but only when you feel really uncomfortable from the cold. Moving about to keep warm also helps.

If it takes some time for help to arrive, now and then when you run the engine, push the accelerator pedal slightly so the engine runs faster than the idle speed. This keeps the battery charged to restart the vehicle and to signal for help with the headlamps. Do this as little as possible to save fuel.

If the Vehicle Is Stuck

Slowly and cautiously spin the wheels to free the vehicle when stuck in sand, mud, ice, or snow.

If stuck too severely for the traction system to free the vehicle, turn the traction system off and use the rocking method. See *Traction Control/Electronic Stability Control on page 9-38*.

⚠ Warning

If the vehicle's tires spin at high speed, they can explode, and you or others could be injured. The vehicle can overheat, causing an engine compartment fire or other damage. Spin the wheels as little as possible and avoid going above 56 km/h (35 mph).

Rocking the Vehicle to Get it Out

Turn the steering wheel left and right to clear the area around the front wheels. Turn off any traction system. Shift back and forth between R (Reverse) and a low forward gear, spinning the wheels as little as possible. To prevent transmission wear, wait until the wheels stop spinning before shifting gears. Release the accelerator pedal while shifting, and press lightly on the accelerator pedal when the transmission is in gear. Slowly spinning the wheels in the forward and reverse directions causes a rocking motion that could free the vehicle. If that does not get the vehicle out after a few tries, it might need to be towed out. If the vehicle does need to be towed out, see *Towing the Vehicle on page 10-99*.

Vehicle Load Limits

It is very important to know how much weight the vehicle can carry. This weight is called the vehicle capacity weight and includes the weight of all occupants, cargo and all nonfactory-installed options. Two labels on the vehicle show how much weight it may properly carry, the Tire and Loading Information label and the Certification label.

⚠ Warning

Do not load the vehicle any heavier than the Gross Vehicle Weight Rating (GVWR), or either the maximum front or rear Gross Axle Weight Rating (GAWR). This can cause systems to break and change the way the

(Continued)

Warning (Continued)

vehicle handles. This could cause loss of control and a crash. Overloading can also shorten the life of the vehicle.

Tire and Loading Information Label

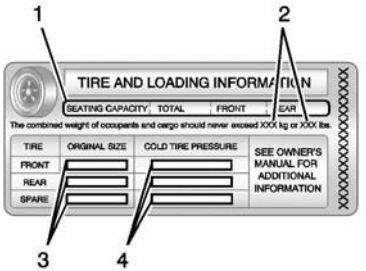

Label Example

A vehicle-specific Tire and Loading Information label is attached to the vehicle's center

pillar (B-pillar). With the driver door open, the label is attached near the door lock post. The Tire and Loading Information label shows the number of occupant seating positions (1), and the maximum vehicle capacity weight (2) in kilograms and pounds.

The Tire and Loading Information label also shows the tire size of the original equipment tires (3) and the recommended cold tire inflation pressures (4). For more information on tires and inflation see *Tires on page 10-56* and *Tire Pressure on page 10-65*.

There is also important loading information on the Certification label. It tells you the Gross Vehicle Weight Rating (GVWR) and the Gross Axle Weight Rating (GAWR) for the front and rear axle. See “Certification Label” later in this section.

“Steps for Determining Correct Load Limit–

1. Locate the statement "The combined weight of occupants and cargo should never exceed XXX kg or XXX lbs." on your vehicle’s placard.
2. Determine the combined weight of the driver and passengers that will be riding in your vehicle.
3. Subtract the combined weight of the driver and passengers from XXX kg or XXX lbs.
4. The resulting figure equals the available amount of cargo and luggage load capacity. For example, if the "XXX" amount equals 1400 lbs. and there will be five 150 lb passengers in your vehicle, the amount of available cargo and luggage load capacity is 650 lbs. (1400-750 (5 x 150) = 650 lbs.)
5. Determine the combined weight of luggage and cargo being loaded on the vehicle. That weight may not safely exceed the available cargo and luggage load capacity calculated in Step 4.
6. If your vehicle will be towing a trailer, load from your trailer will be transferred to your vehicle. Consult this manual to determine how this reduces the available cargo and luggage load capacity of your vehicle.”

See *Trailer Towing (ZL1 or Z/28) on page 9-59* or *Trailer Towing (Except ZL1 or Z/28) on page 9-59* for important

information on towing a trailer, towing safety rules, and trailering tips.

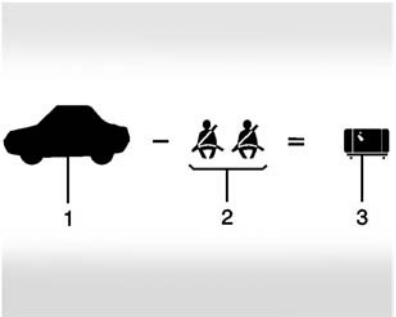

Example 1

1. Vehicle Capacity Weight for Example 1 = 453 kg (1,000 lbs).
2. Subtract Occupant Weight @ 68 kg (150 lbs) × 2 = 136 kg (300 lbs).
3. Available Occupant and Cargo Weight = 317 kg (700 lbs).

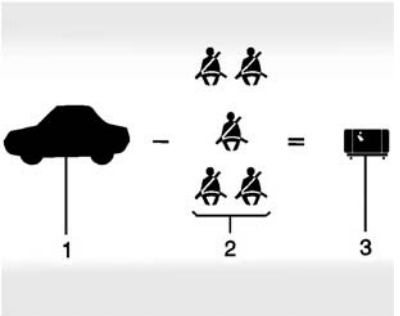

Example 2

1. Vehicle Capacity Weight for Example 2 = 453 kg (1,000 lbs).
2. Subtract Occupant Weight @ 68 kg (150 lbs) × 5 = 340 kg (750 lbs).
3. Available Cargo Weight = 113 kg (250 lbs).

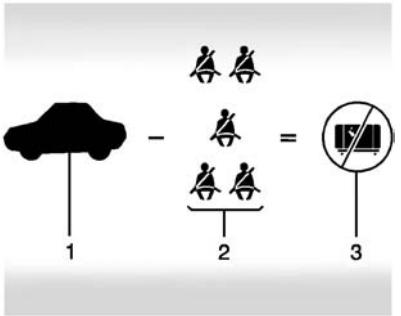

Example 3

1. Vehicle Capacity Weight for Example 3 = 453 kg (1,000 lbs).
2. Subtract Occupant Weight @ 91 kg (200 lbs) × 5 = 453 kg (1,000 lbs).
3. Available Cargo Weight = 0 kg (0 lbs).

Refer to the vehicle's Tire and Loading Information label for specific information about the vehicle's capacity weight and

seating positions. The combined weight of the driver, passengers, and cargo should never exceed the vehicle's capacity weight.

Certification Label

Label Example

A vehicle-specific Certification label is attached to the vehicle's center pillar (B-pillar). With the driver door open, the label is attached near the door lock post. The label tells the gross weight capacity of the vehicle, called the Gross Vehicle Weight Rating (GVWR). The GVWR includes the weight of the vehicle, all occupants, fuel, and cargo. Never exceed the GVWR for the vehicle, or the Gross Axle Weight Rating (GAWR) for either the front or rear axle.

And, if there is a heavy load, it should be spread out. See “Steps for Determining Correct Load Limit” earlier in this section.

⚠ Warning

Do not load the vehicle any heavier than the Gross Vehicle Weight Rating (GVWR), or either the maximum front or rear Gross Axle Weight Rating (GAWR). This can cause systems to break and change the way the vehicle handles. This could

(Continued)

Warning (Continued)

cause loss of control and a crash. Overloading can also shorten the life of the vehicle.

If you put things inside the vehicle — like suitcases, tools, packages, or anything else — they will go as fast as the vehicle goes. If you have to stop or turn quickly, or if there is a crash, they will keep going.

⚠ Warning

Things inside the vehicle can strike and injure people in a sudden stop or turn, or in a crash.

- Put things in the cargo area of the vehicle. In the cargo area, put them as

(Continued)

Warning (Continued)

far forward as possible. Try to spread the weight evenly.

- Never stack heavier things, like suitcases, inside the vehicle so that some of them are above the tops of the seats.
- Do not leave an unsecured child restraint in the vehicle.
- Secure loose items in the vehicle.
- Do not leave a seat folded down unless needed.

Starting and Operating

New Vehicle Break-In

⚠ Caution

Follow these recommended guidelines during the first 2 414 km (1,500 mi) of driving this vehicle. Parts have a break-in period and performance will be better in the long run.

- For the first 2 414 km (1,500 mi):
- Avoid full throttle starts and abrupt stops.
- Do not exceed 4000 engine rpm.
- Avoid driving at any one constant speed, fast or slow.
- Do not drive above 129 km/h (80 mph).

(Continued)

Caution (Continued)

- Avoid downshifting to brake or slow the vehicle when the engine speed will exceed 4,000 rpm.
- Do not let the engine labor. Never lug the engine in high gear at low speeds. With a manual transmission, shift to the next lower gear. This rule applies at all times, not just during the break-in period.
- Do not participate in racing events, sport driving schools, or similar activities during this break-in period.
- Check engine oil with every refueling and add if necessary. Oil and fuel consumption may be higher than normal during the first 2 414 km (1,500 mi).

(Continued)

Caution (Continued)

- To break in new tires, drive at moderate speeds and avoid hard cornering for the first 322 km (200 mi). New tires do not have maximum traction and may tend to slip.
- New brake linings also need a break-in period. Avoid making hard stops during the first 322 km (200 mi). This is recommended every time brake linings are replaced.
- Should the vehicle be used for racing or competitive driving (after break-in), the rear axle lubricant must be replaced before hand.

See *Track Events and Competitive Driving on page 9-6*.

Ignition Positions

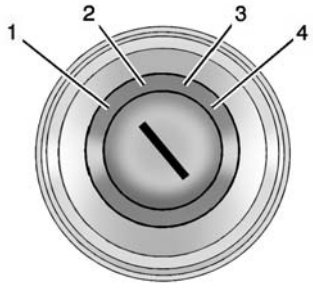

The ignition switch has four different positions.

⚠ Caution

Using a tool to force the key to turn in the ignition could cause damage to the switch or break the key. Use the correct key, make sure it is all the way in, and turn it only with your hand. If the key cannot be turned by hand, see your dealer.

The key must be fully extended to start the vehicle.

To shift out of P (Park), turn the ignition to ON/RUN and apply the brake pedal.

1 (STOPPING THE ENGINE/LOCK/OFF): When the vehicle is stopped, turn the ignition switch to LOCK/OFF to turn the engine off. Retained Accessory Power (RAP) will remain active. See *Retained Accessory Power (RAP) on page 9-23*.

This is the only position from which the key can be removed. This locks the steering wheel, ignition, and automatic transmission.

On vehicles with an automatic transmission, the shift lever must be in P (Park) to turn the ignition switch to the LOCK/OFF position.

Do not turn the engine off when the vehicle is moving. This will cause a loss of power assist in the brake and steering systems and disable the airbags.

The ignition switch can bind in the LOCK/OFF position with the wheels turned off center. If this happens, move the steering wheel from right to left while turning the key to ACC/ACCESSORY. If this does not work, then the vehicle needs service.

If the vehicle must be shut off in an emergency:

1. Brake using a firm and steady pressure. Do not pump the brakes repeatedly. This may deplete power assist, requiring increased brake pedal force.
2. Shift the vehicle to neutral. This can be done while the vehicle is moving. After shifting to neutral, continue to firmly apply the brakes and steer the vehicle to a safe location.
3. Come to a complete stop. Shift to P (Park) with an automatic transmission, or Neutral with a manual transmission. Turn the ignition to LOCK/OFF.
4. Set the parking brake. See *Parking Brake on page 9-37*.

⚠ Warning

Turning off the vehicle while moving may cause loss of power assist in the brake and steering systems and disable the airbags. While driving, only shut the vehicle off in an emergency.

If the vehicle cannot be pulled over, and must be shut off while driving, turn the ignition to ACC/ACCESSORY.

2 (ACC/ACCESSORY): This position provides power to some of the electrical accessories. It unlocks the steering wheel and ignition. To move the key from ACC/ACCESSORY to LOCK/OFF, push in the key and then turn it to LOCK/OFF.

3 (ON/RUN): The ignition switch stays in this position when the engine is running. This position can be used to operate the electrical accessories, including the ventilation fan and 12-volt power outlet, as well as to display some warning and indicator lights. This position can also be used for service and diagnostics, and to verify the proper operation of the malfunction indicator lamp as may be required for emission inspection purposes. The transmission is also unlocked in this position on automatic transmission vehicles.

The battery could be drained if the key is left in the ACC/ACCESSORY or ON/RUN position with the engine off. The vehicle might not start if the battery is allowed to drain for an extended period of time.

4 (START): This position starts the engine. When the engine starts, release the key. The ignition switch will return to ON/RUN for normal driving.

A warning tone sounds when the driver door is opened if the ignition is still in ACC/ACCESSORY and the

key is in the ignition. If the ignition becomes difficult to turn, see *Keys on page 2-1*.

Starting the Engine

Place the transmission in the proper gear.

⚠ Caution

If you add electrical parts or accessories, you could change the way the engine operates. Any resulting damage would not be covered by the vehicle warranty. See *Add-On Electrical Equipment on page 9-61*.

⚠ Caution

If the steering wheel is turned until it reaches the end of its travel, and is held in that position while starting the vehicle, damage

(Continued)

Caution (Continued)

may occur to the hydraulic power steering system and there may be loss of power steering assist.

Automatic Transmission

Move the shift lever to P (Park) or N (Neutral). To restart the vehicle when it is already moving, use N (Neutral) only.

⚠ Caution

Do not try to shift to P (Park) if the vehicle is moving. If you do, you could damage the transmission. Shift to P (Park) only when the vehicle is stopped.

Manual Transmission

The shift lever should be in Neutral and the parking brake engaged. Hold the clutch pedal down to the floor and start the engine.

Starting Procedure

1. With your foot off the accelerator pedal, turn the ignition key to START. When the engine starts, let go of the key. The idle speed will go down as the engine warms. Do not race the engine immediately after starting it. Allow the oil to warm up and lubricate all moving parts.

⚠ Caution

Cranking the engine for long periods of time, by returning the ignition to the START position immediately after cranking has ended, can overheat and damage the cranking motor, and drain the battery. Wait at least 15 seconds between each try, to let the cranking motor cool down.

2. If the engine does not start after five to 10 seconds, especially in very cold weather (below −18°C or 0°F), it could be flooded with

too much gasoline. Push the accelerator pedal all the way to the floor and hold it there as you hold the key in START for a maximum of 15 seconds. Wait at least 15 seconds between each try, to allow the cranking motor to cool. When the engine starts, let go of the key and accelerator. If the vehicle starts briefly but then stops again, repeat the procedure. This clears the extra gasoline from the engine. Do not race the engine immediately after starting it. Operate the engine and transmission gently until the oil warms up and lubricates all moving parts.

Engine Heater

The engine coolant heater, if available, can help in cold weather conditions at or below −18°C (0°F) for easier starting and better fuel economy during engine warm-up. Plug in the coolant heater at least four hours before starting the vehicle. An internal thermostat in the plug-end of the cord will prevent engine coolant heater operation at temperatures above −18°C (0°F).

Using the Engine Coolant Heater

1. Turn off the engine.
2. Open the hood and unwrap the electrical cord.

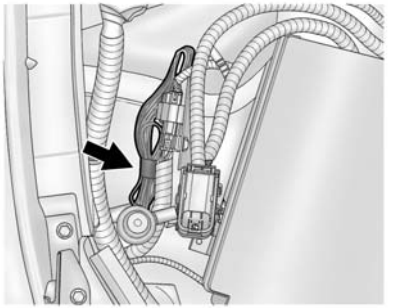

The electrical cord is on the passenger side of the engine compartment, next to the engine compartment fuse block for V6 models.

Check the heater cord for damage. If it is damaged, do not use it. See your dealer for a replacement. Inspect the cord for damage yearly.

3. Plug it into a normal, grounded 110-volt AC outlet.

⚠ Warning

Improper use of the heater cord or an extension cord can damage the cord and may result in overheating and fire.

- Plug the cord into a three-prong electrical utility receptacle that is protected by a ground fault detection

(Continued)

Warning (Continued)

function. An ungrounded outlet could cause an electric shock.

- Use a weatherproof, heavy-duty, 15 amp-rated extension cord if needed. Failure to use the recommended extension cord in good operating condition, or using a damaged heater or extension cord, could make it overheat and cause a fire, property damage, electric shock, and injury.
- Do not operate the vehicle with the heater cord permanently attached to the

(Continued)

Warning (Continued)

vehicle. Possible heater cord and thermostat damage could occur.

- While in use, do not let the heater cord touch vehicle parts or sharp edges. Never close the hood on the heater cord.
- Before starting the vehicle, unplug the cord, reattach the cover to the plug, and securely fasten the cord. Keep the cord away from any moving parts.

4. Before starting the engine, be sure to unplug and store the cord as it was before to keep it away from moving engine parts. If you do not it could be damaged.

The length of time the heater should remain plugged in depends on several factors. Ask a dealer in the area where you will be parking the vehicle for the best advice on this.

Retained Accessory Power (RAP)

These vehicle accessories may be used for up to 10 minutes after the engine is turned off:

- Audio System
- Power Windows
- Sunroof (if equipped)

The power windows and sunroof will continue to work for up to 10 minutes or until any door is opened. The radio will work when the key is in ON/RUN or ACC/ACCESSORY. Once the key is turned from ON/RUN to LOCK/OFF, the radio will continue to work for 10 minutes, or until the driver door is opened or the key is removed from the ignition.

Shifting Into Park

Use this procedure to shift into P (Park):

1. Hold the brake pedal down and set the parking brake.

   See *Parking Brake on page 9-37* for more information.

2. Hold the button on the shift lever and push the lever toward the front of the vehicle into P (Park).
3. Turn the ignition to LOCK/OFF.
4. Remove the key.

Leaving the Vehicle with the Engine Running

⚠ Warning

It can be dangerous to leave the vehicle with the engine running. It could overheat and catch fire.

(Continued)

Warning (Continued)

It is dangerous to get out of the vehicle if the shift lever is not fully in P (Park) with the parking brake firmly set. The vehicle can roll.

Do not leave the vehicle when the engine is running. If you have left the engine running, the vehicle can move suddenly. You or others could be injured. To be sure the vehicle will not move, even when you are on fairly level ground, always set the parking brake and move the shift lever to P (Park). See *Shifting Into Park on page 9-24*. If you are towing a trailer, see *Driving Characteristics and Towing Tips on page 9-55*.

If you have to leave the vehicle with the engine running, the vehicle must be in P (Park) and the parking brake set.

Release the button and check that the shift lever cannot be moved out of P (Park).

Torque Lock

Torque lock is when the weight of the vehicle puts too much force on the parking pawl in the transmission. This happens when parking on a hill and shifting the transmission into P (Park) is not done properly and then it is difficult to shift out of P (Park). To prevent torque lock, set the parking brake and then shift into P (Park). To find out how, see “Shifting Into Park” listed previously.

If torque lock does occur, the vehicle may need to be pushed uphill by another vehicle to relieve the parking pawl pressure, so you can shift out of P (Park).

Shifting out of Park

This vehicle is equipped with an electronic shift lock control system. The shift lock release is designed to:

- Prevent ignition key removal unless the shift lever is in P (Park) with the shift lever button fully released.
- Prevent movement of the shift lever out of P (Park), unless the ignition is in ON/RUN and the brake pedal is applied.

The shift lock release is always functional except in the case of an uncharged or low voltage (less than 9-volt) battery.

If the vehicle has an uncharged battery or a battery with low voltage, try charging or jump starting the battery. See *Jump Starting on page 10-96*.

To shift out of P (Park):

1. Apply the brake pedal.
2. Turn the key to the ON/RUN position.
3. Release the parking brake. See *Parking Brake on page 9-37*.
4. Press the shift lever button.
5. Move the shift lever to the desired position.

If still unable to shift out of P (Park):

1. Fully release the shift lever button.
2. Hold the brake pedal down and press the shift lever button again.
3. Move the shift lever to the desired position.

If the shift lever still cannot be moved from P (Park), see “Shift Lock Manual Release” following.

Shift Lock Manual Release

The transmission has an electric park lock called a shift lock manual release. The key must be in the ON/RUN position, and the brake pedal pressed so the shift lever can be moved from the P (Park) position. If the battery has lost power, the shift lever cannot be moved from P (Park) unless the shift lock manual release is disengaged manually.

To access the shift lock manual release:

1. Apply the parking brake.

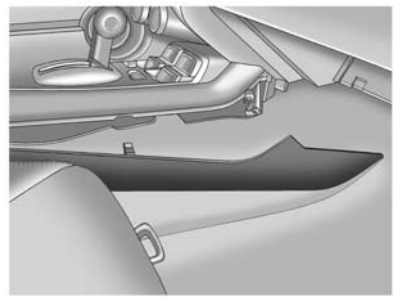

2. Pull the passenger side console trim away from the front half of the console to expose the shift lever mechanism.

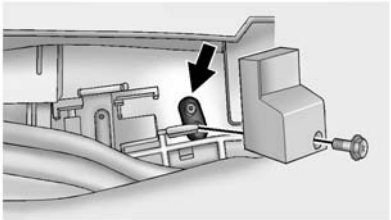

3. Remove the retainer and the shift lock manual release cover.
4. Push and hold the manual release lever toward the rear of the vehicle.
5. Press the select button and move the shift lever to the N (Neutral) position.
6. Release the lever.
7. After the vehicle has been moved, align the shift lock manual release cover plate and install the retainer so the automatic transmission can operate properly.
8. Place the console trim panel in the original position, aligning the fasteners on the trim panel with the slots in the console. Press in the side trim until it clicks in place.

The shift lever locks if it is moved back to the P (Park) position.

Parking (Manual Transmission)

If the vehicle has a manual transmission, before getting out of the vehicle, move the shift lever into R (Reverse), and firmly apply the parking brake. Once the shift lever has been placed into R (Reverse) with the clutch pedal pressed in, turn the ignition key to LOCK/OFF, remove the key, and release the clutch.

If parking on a hill, or if the vehicle is pulling a trailer, see *Driving Characteristics and Towing Tips on page 9-55*.

Parking over Things That Burn

⚠ Warning

Things that can burn could touch hot exhaust parts under the vehicle and ignite. Do not park over papers, leaves, dry grass, or other things that can burn.

Active Fuel Management®

Vehicles with V8 engines and an automatic transmission, except ZL1, have Active Fuel Management®. This system allows the engine to operate on either all or half of its cylinders, depending on the driving conditions.

When less power is required, such as cruising at a constant vehicle speed, the system will operate in the half cylinder mode, allowing the vehicle to achieve better fuel economy. When greater power demands are required, such as accelerating from a stop, passing, or merging onto a freeway, the system will maintain full-cylinder operation.

Engine Exhaust

⚠ Warning

Engine exhaust contains carbon monoxide (CO) which cannot be seen or smelled. Exposure to CO can cause unconsciousness and even death.

Exhaust may enter the vehicle if:

- The vehicle idles in areas with poor ventilation (parking garages, tunnels, deep snow that may block underbody airflow or tail pipes).
- The exhaust smells or sounds strange or different.
- The exhaust system leaks due to corrosion or damage.
- The vehicle exhaust system has been modified, damaged, or improperly repaired.

(Continued)

Warning (Continued)

- There are holes or openings in the vehicle body from damage or aftermarket modifications that are not completely sealed.

If unusual fumes are detected or if it is suspected that exhaust is coming into the vehicle:

- Drive it only with the windows completely down.
- Have the vehicle repaired immediately.

Never park the vehicle with the engine running in an enclosed area such as a garage or a building that has no fresh air ventilation.

Running the Vehicle While Parked

It is better not to park with the engine running.

If the vehicle is left with the engine running, follow the proper steps to be sure the vehicle will not move. See *Shifting Into Park on page 9-24* and *Engine Exhaust on page 9-27*. If the vehicle has a manual transmission, see *Parking (Manual Transmission) on page 9-26*.

If parking on a hill and pulling a trailer, see *Driving Characteristics and Towing Tips on page 9-55*.

Automatic Transmission

The Driver Information Center (DIC) displays the current gear selected in the lower left corner. When Sport Mode is active, an S is displayed. If Manual Mode or Electronic Range Select (ERS) Mode are active, an M and the current gear selected (Tap Shift) or the maximum gear allowed (ERS Mode) are displayed next to the M.

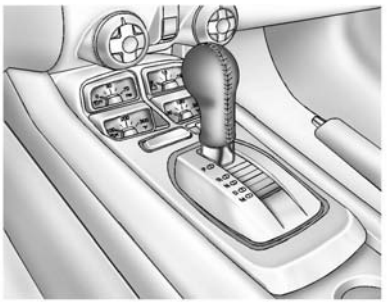

P (Park): This position locks the rear wheels. It is the best position to use when starting the engine because the vehicle cannot move easily.

⚠ Warning

It is dangerous to get out of the vehicle if the shift lever is not fully in P (Park) with the parking brake firmly set. The vehicle can roll.

Do not leave the vehicle when the engine is running. If you have left the engine running, the vehicle can move suddenly. You or others could be injured. To be sure the vehicle will not move, even when you are on fairly level ground, always set the parking brake and move the shift lever to P (Park). See *Shifting Into Park on page 9-24* and *Driving Characteristics and Towing Tips on page 9-55*.

Make sure the shift lever is fully in P (Park) before starting the engine. The vehicle has an automatic transmission shift lock control system. The regular brake must be fully applied first and then the shift lever button pressed before shifting from P (Park) when the ignition key is in ON/RUN. If you cannot shift out of P (Park), ease pressure on the shift lever, then push the shift lever all the way into P (Park) as you maintain brake application. Then press the shift lever button and move the shift lever into another gear. See *Shifting out of Park on page 9-25*.

R (Reverse): Use this gear to back up.

⚠ Caution

Shifting to R (Reverse) while the vehicle is moving forward could damage the transmission. The repairs would not be covered by

(Continued)

Caution (Continued)

the vehicle warranty. Shift to R (Reverse) only after the vehicle is stopped.

To rock the vehicle back and forth to get out of snow, ice, or sand without damaging the transmission, see *If the Vehicle Is Stuck on page 9-13*.

N (Neutral): In this position, the engine does not connect with the wheels. To restart the engine when the vehicle is already moving, use N (Neutral) only. Also, use N (Neutral) when the vehicle is being towed.

⚠ Warning

Shifting into a drive gear while the engine is running at high speed is dangerous. Unless your foot is firmly on the brake pedal, the vehicle could move very rapidly.

(Continued)

Warning (Continued)

You could lose control and hit people or objects. Do not shift into a drive gear while the engine is running at high speed.

⚠ Caution

Shifting out of P (Park) or N (Neutral) with the engine running at high speed may damage the transmission. The repairs would not be covered by the vehicle warranty. Be sure the engine is not running at high speed when shifting the vehicle.

D (Drive): This position is for normal driving. It provides the best fuel economy. When the ZL1 is in D (Drive), the first shift after start will be from 1 (First) gear. Following starts will begin in 2 (Second) gear.

If more power is needed for passing, and the vehicle is:

- Going less than 56 km/h (35 mph), push the accelerator pedal about halfway down.
- Going about 56 km/h (35 mph) or more, push the accelerator all the way down.

Powertrain Braking (V6 and V8 Engines Except ZL1)

When driving on steep descents with the shift lever in D (Drive) or M (Manual Mode) where frequent braking is required, the transmission will shift down a gear to help hold vehicle speed and reduce brake wear. If the driver continues to press the brake, the transmission will downshift until 3 (Third) gear is reached.

If the brake is released for some time, the transmission will upshift a gear. If the road levels out and the accelerator pedal is pressed, the transmission will upshift until the appropriate gear is reached.

⚠ Caution

If the vehicle accelerates slowly, or does not shift gears, the transmission could be damaged. Have the vehicle serviced right away.

M (Manual Mode): This position allows the driver to select gears appropriate for current driving conditions.

With the shift lever in M (Manual Mode) position, vehicles with axle code GW8 will enter ERS Mode. See *Manual Mode on page 9-31*.

With the shift lever in M (Manual Mode) position, and without using the Tap Shift controls on the steering wheel, vehicles with any axle other than GW8 will be in Sport Mode. Sport Mode provides firmer, quicker shifting. The transmission will shift automatically until the Tap Shift controls are used. Tap Shift activates driver manual gear selection. See *Manual Mode on page 9-31*.

V6 Models without Axle GW8, V8 Models Except ZL1

While driving in Sport Mode, if Tap Shift has not been activated, the transmission determines when the vehicle is being driven in a competitive manner. The transmission may remain in a gear longer than it would in the normal driving mode based on throttle input and vehicle lateral acceleration. If there is a rapid reduction in throttle from a heavy throttle position, the transmission will maintain the current gear up to near redline rpm. While braking, the transmission will automatically downshift to the next lower gear keeping engine speed above approximately 3000 rpm. If the vehicle is then driven for a short time at a steady speed, and without high cornering loads, the transmission will up-shift one gear at a time, until 6 (Sixth) gear. After

shifting to 6 (Sixth) gear, or coming to a complete stop, the transmission will return to normal Sport Mode shifting.

ZL1

While driving in Sport Mode, if Tap Shift has not been activated, the transmission determines when the vehicle is being driven in a competitive manner, in a straight line or while turning. The transmission may remain in a gear longer than it would in the normal driving mode based on throttle input and vehicle lateral acceleration. If there is a rapid reduction in throttle from a heavy throttle position, the transmission will maintain the current gear up to approximately 4600 rpm. While braking, the transmission will automatically downshift to the next lower gear keeping engine speed below approximately 3000 rpm. If the vehicle is then driven for a short time at a steady speed, and without high cornering loads, the transmission will up-shift one gear at a time, until 6 (Sixth) gear. After shifting to 6 (Sixth) gear, or coming to a complete stop, the transmission will return to normal sport mode shifting.

If the vehicle detects aggressive cornering, even without a heavy application of the throttle, the transmission will downshift and hold a lower gear to near redline rpm, to aid in vehicle handling balance and to improve corner exit speeds.

Manual Mode

Electronic Range Select (ERS) Mode

Vehicles with axle code GW8 have an ERS Mode. ERS Mode allows you to choose the top-gear limit of the transmission with fully automatic gear selection. This can help control the vehicle's speed while driving downhill or towing a trailer. The vehicle has an electronic shift position indicator within the instrument cluster. When using the ERS mode a number will display next to the M, indicating the current maximum gear allowed. Vehicles with this feature have indicators on the steering wheel. The controls are on the back of the steering wheel.

To use this feature:

1. Move the shift lever to M (Manual Mode).
2. Press the plus/minus paddles on the back of the steering wheel, to increase or decrease the gear range available.

When you shift from D (Drive) to M (Manual Mode), the transmission will shift to a lower gear range. The highest gear available for this range is displayed next to the M in the DIC. The number displayed in the DIC is the highest gear that the transmission will be allowed to operate in. This means that all gears below that number are available. For example, when 4 (Fourth) is shown next to the M, 1 (First) through 4 (Fourth) gears are automatically shifted by the vehicle.

The transmission will not shift into 5 (Fifth) until the + (Plus) paddle is used or you shift back into D (Drive).

While in M (Manual Mode), the transmission will prevent shifting to a lower gear range if the engine speed is too high. The DIC will still indicate the lower gear range selected, but the transmission will not initiate the downshift until the vehicle has met a minimum speed requirement.

Tap Shift

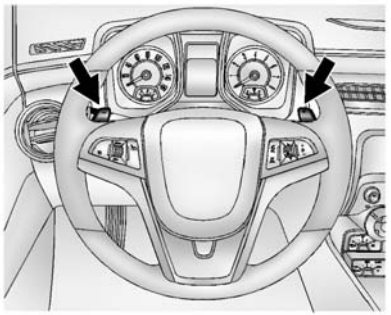

Vehicles with any axle other than GW8 have a Tap Shift Mode. Tap Shift allows you to manually control the automatic transmission. To use Tap Shift, the shift lever must be in M (Manual Mode). Vehicles with this feature have indicators on the steering wheel. The controls are on the back of the steering wheel. Tap the left control to downshift, and the right control to upshift. The DIC display indicates the gear the vehicle is in.

While in M (Manual Mode), the transmission will prevent shifting to a lower gear if the engine speed is too high. If the tap down − (Minus) paddle is held while the vehicle slows down, the M in the DIC will flash, and the downshift will be allowed when vehicle speed is low enough. Continuing to hold the tap down − (Minus) paddle will not cause the transmission to continue downshifting. Each downshift must be requested separately by releasing and reapplying the tap down − (Minus) paddle.

English

Metric

Vehicles equipped with a Head-Up Display (HUD) may also have shift timing lights across the top of the display. As you approach a shift point, the rows of lights grow closer together. The transmission should be shifted before the lights come together in the middle of the display. If the lights begin flashing, you have exceeded the shift point. Shift immediately.

See *Driver Information Center (DIC) on page 5-24* and *Head-Up Display (HUD) on page 5-28*.

When in Tap Shift Mode, you can exit Tap Shift by holding the right (upshift) control for two seconds. The transmission will return to automatic shifting.

You may choose to briefly enter Tap Shift Mode while in D (Drive). Tapping either the upshift or downshift control will place the transmission in Tap Shift Mode. Exit Tap Shift Mode by holding the upshift control for two seconds. The system will return to automatic shifting after 10 seconds of cruising at a steady speed, or when the vehicle comes to a stop.

You may use this for sport driving or when climbing or descending hills, to stay in gear longer, or to downshift for more power or engine braking. The transmission will only allow you to shift into gears appropriate for the vehicle speed and engine revolutions per minute (rpm). The transmission will not automatically shift to the next higher gear if the engine rpm is too high. If shifting is prevented for any reason, the message SHIFT DENIED will appear in the DIC, indicating that the transmission has not shifted gears. While in the Tap Shift Mode, the transmission will not automatically downshift on hard acceleration.

When coasting to a stop in Tap Shift Mode, the V6 transmission will automatically downshift to 1 (First) gear, and the V8 transmission will automatically downshift to 2 (Second) gear. A 1 (First) gear start can be selected using the Tap Shift controls on V8 models. When accelerating from a stop, the transmissions will hold these gears until higher gears are manually selected using the Tap Shift controls.

When accelerating the vehicle from a stop in snowy and icy conditions, you may want to shift into 2 (Second) gear. A higher gear ratio allows you to gain more traction on slippery surfaces. ZL1 vehicles may also be shifted into 3 (Third) gear.

Manual Transmission

Shift Pattern (V8 Engines)

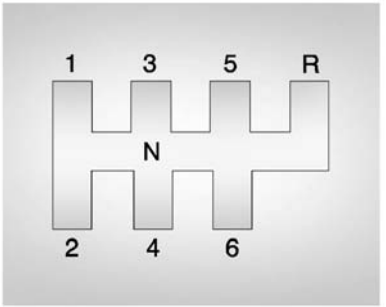

Shift Pattern (V6 Engine)

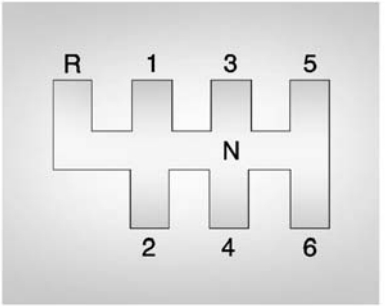

These are the shift patterns for the 6-speed manual transmissions.

To operate the transmission:

1 (First): Press the clutch pedal and shift into 1 (First). Then slowly let up on the clutch pedal as you press the accelerator pedal.

You can shift into 1 (First) when you are going less than 64 km/h (40 mph). If you come to a complete stop and it is hard to shift into 1 (First), put the shift lever in Neutral and let up on the clutch. Press the clutch pedal back down. Then shift into 1 (First).

2 (Second): Press the clutch pedal as you let up on the accelerator pedal and shift into 2 (Second). Then, slowly let up on the clutch pedal as you press the accelerator pedal.

3 (Third), 4 (Fourth), 5 (Fifth), and 6 (Sixth): Shift into 3 (Third), 4 (Fourth), 5 (Fifth), and 6 (Sixth) the same way you do for 2 (Second). Slowly let up on the clutch pedal as you press the accelerator pedal.

To stop, let up on the accelerator pedal and press the brake pedal. Just before the vehicle stops, press the clutch pedal and the brake pedal, and shift to Neutral.

Neutral: Use this position when you start or idle the engine. The shift lever is in Neutral when it is centered in the shift pattern, not in any gear.

R (Reverse): To back up, press down the clutch pedal and shift into R (Reverse). On V8 models, apply pressure to get the lever past 5 (Fifth) and 6 (Sixth) into R (Reverse). Let up on the clutch pedal slowly while pressing the accelerator pedal.

One to Four Shift Message (V8 Only)

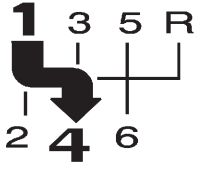

When this message comes on, you can only shift from 1 (First) to 4 (Fourth) instead of 1 (First) to 2 (Second). The message will be displayed in the Driver Information Center.

You must complete the shift into 4 (Fourth) to turn off this feature. This helps you get the best possible fuel economy.

After shifting to 4 (Fourth), you may downshift to a lower gear if you prefer.

⚠ Caution

Forcing the shift lever into any gear except 4 (Fourth) when the 1 — 4 SHIFT message comes on may damage the transmission. Shift only from 1 (First) to 4 (Fourth) when the message comes on.

This message will come on when:

- The engine coolant temperature is higher than 76°C (169°F).
- The vehicle is accelerating from a stop and going 24 to 31 km/h (15 to 19 mph).
- The vehicle is at 21% throttle or less.

English

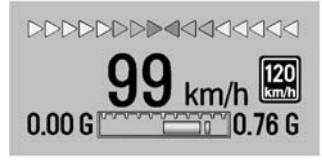

Metric

Vehicles equipped with a Head-Up Display (HUD) may also have shift timing lights across the top of the display. As you approach a shift point, the rows of lights grow closer together. The transmission should be shifted before the lights come together in the middle of the display. If the lights begin flashing, you have exceeded the shift point. Shift immediately.

See *Driver Information Center (DIC) on page 5-24* and *Head-Up Display (HUD) on page 5-28*.

Brakes

Antilock Brake System (ABS)

This vehicle has ABS, an advanced electronic braking system that helps prevent a braking skid.

When the vehicle begins to drive away, ABS checks itself.
A momentary motor or clicking noise might be heard while this test is going on, and it might even be noticed that the brake pedal moves a little. This is normal.

If there is a problem with ABS, this warning light stays on. See *Antilock Brake System (ABS) Warning Light on page 5-20*.

If driving safely on a wet road and it becomes necessary to slam on the brakes and continue braking to avoid a sudden obstacle, a computer senses the wheels are slowing down. If one of the wheels is about to stop rolling, the computer will separately work the brakes at each wheel.

ABS can change the brake pressure to each wheel, as required, faster than any driver could. This can help you steer around the obstacle while braking hard.

As the brakes are applied, the computer keeps receiving updates on wheel speed and controls braking pressure accordingly.

Remember: ABS does not change the time needed to get a foot up to the brake pedal or always decrease stopping distance. If you get too close to the vehicle in front of you, there will not be enough time to apply the brakes if that vehicle

suddenly slows or stops. Always leave enough room up ahead to stop, even with ABS.

Using ABS

Do not pump the brakes. Just hold the brake pedal down firmly and let ABS work. You may hear the ABS pump or motor operating and feel the brake pedal pulsate. This is normal.

Braking in Emergencies

ABS allows you to steer and brake at the same time. In many emergencies, steering can help more than even the very best braking.

Parking Brake

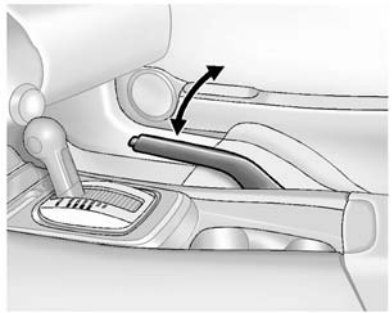

To apply the parking brake, pull up on the parking brake handle. It is not necessary to press the release button in while applying the parking brake. If the ignition is in the ON/RUN position, the brake system warning light will come on. See *Brake System Warning Light on page 5-19*.

To release the parking brake:

1. Hold the brake pedal down.
2. Pull the parking brake handle up until you can press the release button.
3. Hold the release button in as you move the brake handle all the way down.

⚠ Caution

Driving with the parking brake on can overheat the brake system and cause premature wear or damage to brake system parts. Make sure that the parking brake is fully released and the brake warning light is off before driving.

Driving with the parking brake applied will cause a warning chime to sound and the RELEASE PARKING BRAKE message to appear in the DIC. The message will remain on until:

- The parking brake is released.
- The vehicle comes to a stop.

If you are towing a trailer and parking on a hill, see *Driving Characteristics and Towing Tips on page 9-55*.

Brake Assist

This vehicle has a brake assist feature designed to assist the driver in stopping or decreasing vehicle speed in emergency driving conditions. This feature uses the stability system hydraulic brake control module to supplement the power brake system under conditions where the driver has quickly and forcefully applied the brake pedal in an attempt to quickly stop or slow down the vehicle. The stability system hydraulic brake control module increases brake pressure at each corner of the vehicle until the ABS activates. Minor brake pedal pulsation or pedal movement during this time is normal and the driver should continue to apply the brake pedal as the driving situation dictates. The brake assist feature will automatically disengage when the brake pedal is released or brake pedal pressure is quickly decreased.

Hill Start Assist (HSA)

If equipped, HSA may automatically activate when the vehicle is stopped on a grade. This feature is designed to prevent the vehicle from rolling, either forward or rearward, during vehicle drive off. During the transition from releasing the brake pedal to accelerating to drive off on a grade, HSA holds the braking pressure to prevent rolling. HSA will not activate if the vehicle is in a drive gear and facing downhill or if the vehicle is facing uphill and in R (Reverse).

Ride Control Systems

Traction Control/ Electronic Stability Control

System Operation

The vehicle has a Traction Control System (TCS) and StabiliTrak®, an electronic stability control system. These systems help limit wheel slip and assist the driver in maintaining control, especially on slippery road conditions.

TCS activates if it senses that any of the drive wheels are spinning or beginning to lose traction. When this happens, TCS applies the brakes to the spinning wheels and reduces engine power to limit wheel spin.

StabiliTrak activates when the vehicle senses a difference between the intended path and the direction the vehicle is actually traveling. StabiliTrak selectively applies braking pressure to any one of the

vehicle wheel brakes to assist the driver in keeping the vehicle on the intended path.

If cruise control is being used and traction control or StabiliTrak begins to limit wheel spin, cruise control will disengage. Cruise control may be turned back on when road conditions allow.

Both systems come on automatically when the vehicle is started and begins to move. The systems may be heard or felt while they are operating or while performing diagnostic checks. This is normal and does not mean there is a problem with the vehicle.

It is recommended to leave both systems on for normal driving conditions, but it may be necessary to turn TCS off if the vehicle gets stuck in sand, mud, ice, or snow. See *If the Vehicle Is Stuck on page 9-13* and “Turning the Systems Off and On” later in this section.

The indicator light for both systems is in the instrument cluster. This light will:

- Flash when TCS is limiting wheel spin.
- Flash when StabiliTrak is activated.
- Turn on and stay on when either system is not working.

If either system fails to turn on or to activate, a message displays in the Driver Information Center (DIC), and comes on and stays on to indicate that the system is inactive and is not assisting the driver in maintaining control. The vehicle is safe to drive, but driving should be adjusted accordingly.

If comes on and stays on:

1. Stop the vehicle.
2. Turn the engine off and wait 15 seconds.
3. Start the engine.

Drive the vehicle. If comes on and stays on, the vehicle may need more time to diagnose the problem. If the condition persists, see your dealer.

Turning the Systems Off and On

The button for TCS and StabiliTrak is on the center console in front of the shift lever.

⚠ Caution

Do not repeatedly brake or accelerate heavily when TCS is off. The vehicle driveline could be damaged.

To turn off only TCS, press and release the OFF button. The traction off light displays in the instrument cluster.

To turn TCS on again, press and release the OFF button. The traction off light displayed in the instrument cluster will turn off.

If TCS is limiting wheel spin when the OFF button is pressed, the system will not turn off until the wheels stop spinning.

To turn off both TCS and StabiliTrak, press and hold the OFF button until the traction off light and StabiliTrak OFF light OFF come on and stay on in the instrument cluster.

To turn TCS and StabiliTrak on again, press and release the OFF button. The traction off light and StabiliTrak OFF light OFF in the instrument cluster turn off.

Adding accessories can affect the vehicle performance. See *Accessories and Modifications on page 10-3*.

Engine Drag Control (EDC)

EDC improves vehicle stability by sensing if there is a difference in speed between the free rolling front wheels and the rear drive wheels that often occurs when the driver takes their foot off the accelerator pedal on slippery surfaces (snow, ice, etc.). When this is detected, EDC sends more torque to the rear wheels to make sure all four wheels are spinning at similar speeds, making the vehicle more stable.

Competitive Driving Mode

Competitive Driving Mode, Performance Traction Management (PTM), and Launch Control are systems designed to allow increased performance while accelerating and/or cornering. This is accomplished by regulating and optimizing the engine, brakes, and suspension performance. These modes are for use at a closed course race track and are not intended for use on public roads. They will not compensate for a driver's inexperience or lack of familiarity with the race track. Drivers who prefer to allow the system to have more control of the engine, brakes, and suspension are advised to turn the normal TCS and StabiliTrak systems on.

⚠ Caution

Attempting to shift when the drive wheels are spinning and do not have traction may cause damage to the transmission. Damage caused by misuse of the vehicle is not covered by the vehicle warranty. Do not attempt to shift when the drive wheels do not have traction.

Competitive Driving Mode (SS and ZL1 Convertible Only)

Competitive Driving Mode allows full engine power while the StabiliTrak system helps maintain directional control of the vehicle by selective brake application. In this mode, TCS is off and Launch Control is available. Adjust your driving style to account for the available engine power. See “Launch Control (V8 with Manual Transmissions except Z/28)” later in this section.

These lights are on when the vehicle is in the Competitive Driving Mode.

This optional handling mode can be selected by quickly pressing the TCS/StabiliTrak button on the console two times. The appropriate message displays in the Driver Information Center (DIC). See *Ride Control System Messages on page 5-37*.

When the TCS/StabiliTrak button is pressed again, the TCS and StabiliTrak systems are on. The appropriate message displays briefly in the DIC.

Performance Traction Management (PTM) (ZL1 Coupe and Z/28 Only)

PTM integrates the TCS, StabiliTrak, and Selective Ride Control systems to provide improved and consistent performance when cornering. The amount of available engine power is based on the mode selected, track conditions, driver skill, and the radius of each corner.

These lights are on when the vehicle is in the PTM Mode.

This optional handling mode can be selected by quickly pressing the TCS/StabiliTrak button on the console two times. The appropriate message displays in the DIC. See *Ride Control System Messages on page 5-37*.

To experience the performance benefit of this system, after entering a curve and at the point where the driver would normally start to increase acceleration, the accelerator pedal can be fully pressed. The PTM system will modify the level of engine power for a smooth and consistent corner exit.

ZL1 Shown, Z/28 Similar

The PTM system contains five modes. To select a mode while in PTM, press the Selective Ride Control/PTM −TOUR or +SPORT button on the center console. Scroll up or down through modes 1–5 by pressing the −TOUR or +SPORT button.

The following is a DIC display description and the recommended usage of each mode.

PERF TRACTION 1 – WET ACTIVE HANDLING ON CHASSIS MODE TOUR (ZL1 Coupe and Z/28 Only)

- Intended for all driver skill levels.
- Wet or damp conditions only — not intended for use in heavy rain or standing water.
- StabiliTrak is on and engine power is reduced based on conditions.

PERF TRACTION 2 – DRY ACTIVE HANDLING ON CHASSIS MODE TOUR (ZL1 Coupe and Z/28 Only)

- For use by less experienced drivers or while learning a new track.
- Dry conditions only.
- StabiliTrak is on and engine power is slightly reduced based on conditions.

PERF TRACTION 3 – SPORT 1 ACTIVE HANDLING ON CHASSIS MODE SPORT (ZL1 Coupe and Z/28 Only)

- For use by drivers who are familiar with the track.

- Requires more driving skill than mode 2.
- Dry conditions only.
- StabiliTrak is on and more engine power is available than in mode 2.

PERF TRACTION 4 – SPORT 2 ACTIVE HANDLING OFF CHASSIS MODE SPORT (ZL1 Coupe and Z/28 Only)

- For use by drivers who are familiar with the track.
- Requires more driving skill than modes 2 or 3.
- Dry conditions only.
- StabiliTrak is off and available engine power is the same as mode 3.

PERF TRACTION 5 – RACE ACTIVE HANDLING OFF CHASSIS MODE TRACK (ZL1 Coupe and Z/28 Only)

- For use by drivers who are familiar with the track.
- Requires more driving skill than other modes.
- Dry conditions only.
- StabiliTrak is off and engine power is available for maximum cornering speed.

Use mode 5 for most consistent performance during drag strip use.

When the TCS/StabiliTrak button is pressed again, the vehicle exits PTM mode and the TCS and StabiliTrak systems are on.

Launch Control (V8 with Manual Transmissions except Z/28)

A Launch Control feature is available, within Competitive Driving Mode or PTM, on vehicles with a manual transmission to allow the driver to achieve high levels of vehicle acceleration in a straight line. Launch Control is a form of traction control that manages tire spin while launching the vehicle. This feature is intended for use during closed course race events where consistent zero to sixty and quarter mile times are desirable.

Launch Control is only available when the following criteria are met:

- Competitive Driving Mode is selected or any of the PTM modes are selected.
- The vehicle is not moving.
- The steering wheel is pointing straight.
- The clutch is pressed and the vehicle is in 1 (First) gear.
- The accelerator pedal is rapidly applied to wide open throttle.

The Launch Control feature will initially limit engine speed as the driver rapidly applies the accelerator pedal to wide open throttle.
A smooth, quick release of the clutch, while maintaining the fully pressed accelerator pedal, will manage wheel slip. Complete shifts are described in *Manual Transmission on page 9-34*.

After the vehicle is launched, the system continues in Competitive Driving Mode or PTM.

Competitive Driving Mode, PTM, and Launch Control are systems designed for a closed course race track and not intended for use on public roads. The systems are not intended to compensate for lack of driver experience or familiarity with the race track.

ZL1 Coupe Only

Use mode 5 for the most consistent performance during drag strip use.

Limited-Slip Rear Axle

Vehicles with a limited-slip rear axle can give more traction on snow, mud, ice, sand, or gravel. When traction is low, this feature allows the drive wheel with the most traction to move the vehicle. The limited-slip rear axle also gives the driver enhanced control when cornering hard or completing a maneuver, such as a lane change.

For vehicles with limited slip differential, driven under severe conditions, the rear axle fluid should be changed. See *Competitive Driving Mode on page 9-40* and *Maintenance Schedule on page 11-2*.

Selective Ride Control

ZL1 Only

The vehicle has a ride control system called Magnetic Selective Ride Control. The system provides the following performance benefits:

- Reduced Impact Harshness
- Improved Road Isolation
- Improved High-Speed Stability
- Improved Handling Response
- Better Control of Body Ride Motions

The Selective Ride buttons are on the center console. Press to select the suspension of your choice. The indicator light will illuminate the current suspension setting.

TOUR: Use for normal city and highway driving. The −TOUR button selects a suspension and Electric Power Steering (EPS) calibration that provides a smooth, soft ride.

SPORT: Use where road conditions or personal preference demand more control. The +SPORT button selects a suspension and EPS calibration that provides more “feel,” or response to the road conditions.

The setting can be changed at any time. Based on road conditions, steering wheel angle, and the vehicle speed, the system automatically adjusts to provide the best handling while providing a smooth ride. The Tour and Sport modes will feel similar on a smooth road. Select a new setting whenever driving conditions change.

The Selective Ride button indicator lights will not illuminate when any PTM mode is selected. When this mode is selected, pressing the Selective Ride button will change the PTM mode and the suspension setting will be determined automatically. See *Competitive Driving Mode on page 9-40*.

If a malfunction occurs with the Selective Ride Control system, the appropriate messages will be displayed in the DIC. See *Ride Control System Messages on page 5-37*.

Cruise Control

With cruise control, the vehicle can maintain a speed of about 40 km/h (25 mph) or more without keeping your foot on the accelerator. Cruise control does not work at speeds below 40 km/h (25 mph).

For Z/28 vehicles first sold in Canada, cruise control does not work at speeds below 52 km/h (32 mph).

⚠ Warning

Cruise control can be dangerous where you cannot drive safely at a steady speed. Do not use the cruise control on winding roads or in heavy traffic.

Cruise control can be dangerous on slippery roads. On such roads, fast changes in tire traction can cause excessive wheel slip, and you could lose control. Do not use cruise control on slippery roads.

If the StabiliTrak® system begins to limit wheel spin while using cruise control, the cruise control automatically disengages. See *Traction Control/Electronic Stability Control on page 9-38*. When road conditions allow you to safely use it again, cruise control can be turned back on.

If the brakes are applied, cruise control disengages.

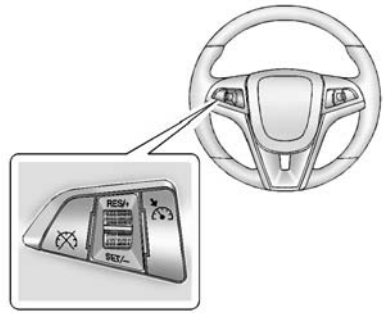

(On/Off): Press to turn the system on and off. A white indicator appears in the instrument cluster when cruise is turned on.

(Cancel): Press to disengage cruise control without erasing the set speed from memory.

RES/+ (Resume/Accelerate): If there is a set speed in memory, press the thumbwheel up briefly to resume to that speed or hold upward to accelerate. If cruise control is already active, use to increase vehicle speed.

SET/− (Set/Coast): Press the thumbwheel down briefly to set the speed and activate cruise control. If cruise control is already active, use to decrease speed.

Setting Cruise Control

If is on when not in use, SET/− or RES/+ could get bumped and go into cruise when not desired. Keep off when cruise control is not being used.

1. Press to turn cruise control on.
2. Get up to the speed desired.
3. Press the thumbwheel toward SET/− and release it.
4. Remove foot from the accelerator.

The cruise control indicator on the instrument cluster turns green after cruise control has been set to the desired speed. See *Instrument Cluster on page 5-7*.

Resuming a Set Speed

If the cruise control is set at a desired speed and then the brakes are applied or is pressed, the cruise control is disengaged without erasing the set speed from memory.

Once the vehicle speed reaches about 40 km/h (25 mph) or more, press the thumbwheel up toward RES/+ briefly. The vehicle returns to the previous set speed.

Increasing Speed While Using Cruise Control

If the cruise control system is already activated:

- Press the thumbwheel up toward RES/+ and hold it until the desired speed is reached, and then release it.
- To increase the vehicle speed in small increments, press the thumbwheel up toward RES/+ briefly. For each press, the vehicle goes about 1.6 km/h (1 mph) faster.

The speedometer reading can be displayed in either English or metric units. See *Driver Information Center (DIC) on page 5-24*. The increment value used depends on the units displayed.

Reducing Speed While Using Cruise Control

If the cruise control system is already activated:

- Press the thumbwheel toward SET/− and hold until the desired lower speed is reached, then release it.
- To decrease the vehicle speed in small increments, press the thumbwheel toward SET/− briefly. For each press, the vehicle goes about 1.6 km/h (1 mph) slower.

The speedometer reading can be displayed in either English or metric units. See *Driver Information Center (DIC) on page 5-24*. The increment value used depends on the units displayed.

Passing Another Vehicle While Using Cruise Control

Use the accelerator pedal to increase the vehicle speed. When you take your foot off the pedal, the vehicle slows down to the previously set cruise control speed. While pressing the accelerator pedal or shortly following the release to override cruise control, briefly moving the thumbwheel toward SET/– will result in cruise control set to the current vehicle speed.

Using Cruise Control on Hills

How well the cruise control works on hills depends upon the vehicle speed, load, and the steepness of the hills. When going up steep hills, you might have to step on the accelerator pedal to maintain the vehicle speed. When going downhill, you might have to brake or shift to a lower gear to keep your speed down. If the brake pedal is applied, cruise control will disengage.

Ending Cruise Control

There are four ways to end cruise control:

- To disengage cruise control, step lightly on the brake pedal or clutch. The indicator light on the instrument cluster goes out.
- Press .
- Shift the transmission to N (Neutral).
- To turn off cruise control, press .

Erasing Speed Memory

The cruise control set speed is erased from memory if is pressed or if the vehicle is turned off.

Driver Assistance Systems

Parking Assist

If equipped, the Rear Parking Assist (RPA) system assists the driver with parking and avoiding objects while in R (Reverse). RPA operates at speeds less than 8 km/h (5 mph). The sensors on the rear bumper detect objects up to 2.5 m (8 ft) behind the vehicle, and at least 20 cm (8 in) off the ground. The distance objects can be detected may be less during warmer or humid weather.

⚠ Warning

The parking assist system does not detect children, pedestrians, bicyclists, animals, or objects below the bumper or that are too close or too far from the vehicle. It is not available at speeds

(Continued)

Warning (Continued)

greater than 8 km/h (5 mph). To prevent injury, death, or vehicle damage, even with parking assist, always check the area around the vehicle and check all mirrors before backing.

How the System Works

RPA comes on automatically when the shift lever is moved into R (Reverse). A single beep sounds to indicate the system is working.

An obstacle detection is indicated by beeps. The interval between the beeps becomes shorter as the vehicle gets closer to the obstacle. When the distance is less than 30 cm (12 in), the beeping is a continuous beep for five seconds.

Turning the System On and Off

The RPA system can be turned on and off using the infotainment system controls. See *Vehicle Personalization on page 5-42*.

When the system is off, PARK ASSIST OFF displays on the Driver Information Center (DIC). The message disappears after a short period of time.

RPA defaults to the on setting each time the vehicle is started.

Turn off RPA when towing a trailer.

When the System Does Not Seem to Work Properly

The following messages may be displayed on the DIC:

SERVICE PARKING ASSIST: If this message occurs, check the following conditions:

- The sensors are not clean. Keep the vehicle's rear bumper free of mud, dirt, snow, ice, and slush. For cleaning instructions, see *Exterior Care on page 10-100*.

- The park assist sensors are covered by frost or ice. Frost or ice can form around and behind the sensors and may not always be seen; this can occur after washing the vehicle in cold weather. The message may not clear until the frost or ice has melted.

If the above conditions do not exist, take the vehicle to your dealer to repair the system.

PARK ASSIST OFF: If the RPA system does not activate due to a temporary condition, the message displays on the DIC. This can occur under the following conditions:

- The driver has disabled the system.
- An object was hanging out of the trunk during the last drive cycle. Once the object is removed, RPA will return to normal operation.
- The bumper is damaged. Take the vehicle to your dealer to repair the system.
- Other conditions, such as vibrations from a jackhammer or the compression of air brakes on a very large truck, are affecting system performance.

Rear Vision Camera (RVC)

⚠ Warning

The RVC system does not display children, pedestrians, bicyclists, crossing traffic, animals, or any other object located outside the camera's field of view, below the bumper, or under the vehicle. Perceived distances may be different from actual distances. Do not back the vehicle using only the RVC screen. Failure to use proper care before backing may result in injury, death, or vehicle damage. Always check behind and around the vehicle before backing.

If equipped, the RVC system is designed to help the driver when backing up by displaying a view of the area behind the vehicle. When the key is in ON/RUN and the driver shifts the vehicle into R (Reverse), the video image automatically appears on the infotainment screen. The infotainment screen goes to the previous screen after approximately four seconds once the vehicle is shifted out of R (Reverse).

To see the previous screen sooner, do one of the following:

- Press a hard key on the infotainment system.
- Shift into P (Park).
- Reach a vehicle speed of 8 km/h (5 mph).

Symbols and Guidelines

The RVC system may have a feature that lets the driver view symbols on the infotainment screen while using the RVC. The Rear Parking Assist (RPA) system must not be disabled to use the caution

symbols. The error message Rear Parking Assist Symbols Unavailable may display if RPA has been disabled and the symbols have been turned on. See *Parking Assist on page 9-48*.

The symbols appear and may cover an object when viewing the infotainment screen when an object is detected by the RPA system.

The RVC system may also have a guideline overlay that can help the driver align the vehicle when backing into a parking spot.

To turn the symbols or guidelines on or off:

1. Shift into P (Park).
2. Press the CONFIG button.
3. Select Rear Camera Options.
4. Select Symbols or Guidelines. The feature is on when a check mark appears next to it.

Rear Vision Camera Error Messages

SERVICE REAR VISION CAMERA SYSTEM: This message can display on the infotainment screen when the system is not working properly.

If any other problem occurs or if a problem persists, see your dealer.

Rear Vision Camera Location

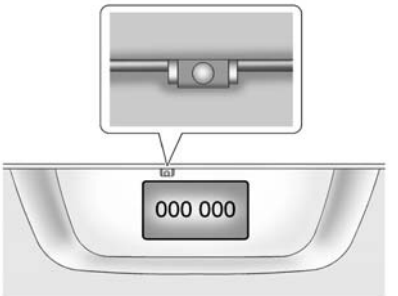

The camera is above the license plate.

The area displayed by the camera is limited. It does not display objects that are close to either corner or under the bumper and can vary depending on vehicle orientation or road conditions. Displayed images may be further or closer than they appear.

The following illustrations show the field of view that the camera provides.

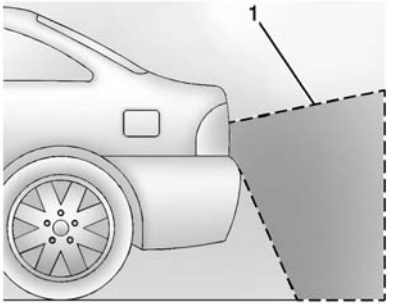

1. View displayed by the camera.

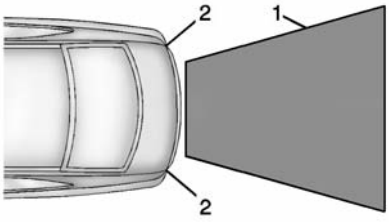

1. View displayed by the camera.
2. Corner of the rear bumper.

When the System Does Not Seem to Work Properly

The RVC system may not work properly or display a clear image if:

- It is dark.
- The sun or the beam of headlamps are shining directly into the camera lens.
- Ice, snow, mud, or anything else builds up on the camera lens. Clean the lens, rinse it with water, and wipe it with a soft cloth.
- The back of the vehicle is in an accident. The position and mounting angle of the camera can change or the camera can be affected. Be sure to have the camera and its position and mounting angle checked at your dealer.

Fuel

Use of the recommended fuel is an important part of the proper maintenance of this vehicle. When driving in the U.S. and Canada, to help keep the engine clean and maintain optimum vehicle performance, we recommend TOP TIER Detergent Gasolines. See www.toptiergas.com for a list of TOP TIER Detergent Gasolines.

TOP TIER™
Detergent Gasoline

CATEGORIE SUPERIÉURE™
Essences Détergentes

If the vehicle has a V6 engine, use regular unleaded gasoline meeting ASTM specification D4814 with a

posted octane rating of 87 or higher. Do not use gasoline with an octane rating below 87, as it may cause engine damage and will lower fuel economy.

If the vehicle has an L99 or LS3 V8 engine, use premium unleaded gasoline meeting ASTM specification D4814 with a posted octane rating of 91 or higher. Regular unleaded gasoline rated at 87 octane or higher can be used, but acceleration and fuel economy will be reduced, and an audible knocking noise may be heard. If this occurs, use a gasoline rated at 91 octane or higher as soon as possible. Otherwise, the engine could be damaged. If heavy knocking is heard when using gasoline with a 91 octane rating or higher, the engine needs service.

If the vehicle has an LS7 or LSA high performance V8 engine, Use premium unleaded gasoline meeting ASTM specification D4814 with a posted octane rating of 91 or higher. If the octane is less than 91, damage to the engine may occur and may void the vehicle warranty. If heavy knocking is heard when using gasoline rated at 91 octane or higher, the engine needs service.

Use of Seasonal Fuels

Use summer and winter fuels in the appropriate season. The fuels industry automatically modifies the fuel for the appropriate season. If fuel is left in the vehicle tank for long periods of time, driving or starting could be affected. Drive the vehicle until the fuel is at one-half tank or less, then refuel with the current seasonal fuel.

Prohibited Fuels

Gasolines containing oxygenates such as ethers and ethanol, as well as reformulated gasolines, are available in some cities. If these gasolines comply with the previously described specification, then they are acceptable to use. However, E85 (85% ethanol) and other fuels containing more than 15% ethanol must be used only in FlexFuel vehicles.

⚠ Caution

Do not use fuel containing methanol. It can corrode metal parts in the fuel system and also damage plastic and rubber parts. That damage would not be covered under the vehicle warranty.

Some gasolines, mainly high octane racing gasolines, can contain an octane-enhancing additive called methylcyclopentadienyl manganese tricarbonyl (MMT). Do not use gasolines and/or fuel additives with MMT as they can reduce spark plug life and affect emission control system performance. The malfunction indicator lamp may turn on. If this occurs, see your dealer for service.

California Fuel Requirements

If the vehicle is certified to meet California Emissions Standards, it is designed to operate on fuels that meet California specifications. See the underhood emission control label. If this fuel is not available in states adopting California Emissions Standards, the vehicle will operate satisfactorily on fuels meeting federal specifications, but emission control system performance might be affected. The malfunction indicator lamp could turn on and the vehicle may not pass a smog-check test. See *Malfunction Indicator Lamp on page 5-16*. If this occurs, return to your authorized dealer for diagnosis. If it is determined that the condition is caused by the type of fuel used, repairs may not be covered by the vehicle warranty.

Fuels in Foreign Countries

If planning to drive in countries outside the U.S. or Canada, the proper fuel might be hard to find. Check regional auto club or fuel retail brand websites for availability in the country where driving. Never use leaded gasoline, fuel containing methanol, manganese, or any other fuel not recommended. Costly repairs caused by use of improper fuel would not be covered by the vehicle warranty.

Fuel Additives

To keep fuel systems clean, TOP TIER Detergent Gasoline is recommended. See *Fuel on page 9-51*.

If TOP TIER Detergent Gasoline is not available, one bottle of Fuel System Treatment PLUS added to the fuel tank at every engine oil change, can help. Fuel System Treatment PLUS is the only gasoline additive recommended by General Motors. It is available at your dealer.

Filling the Tank

⚠ Warning

Fuel vapors and fuel fires burn violently and can cause injury or death.

- To help avoid injuries to you and others, read and follow all the instructions on the fuel pump island.
- Turn off the engine when refueling.
- Keep sparks, flames, and smoking materials away from fuel.
- Do not leave the fuel pump unattended.
- Do not reenter the vehicle while pumping fuel.

(Continued)

Warning (Continued)

- Keep children away from the fuel pump and never let children pump fuel.
- Fuel can spray out if the fuel cap is opened too quickly. This spray can happen if the tank is nearly full, and is more likely in hot weather. Open the fuel cap slowly and wait for any hiss noise to stop then unscrew the cap all the way.

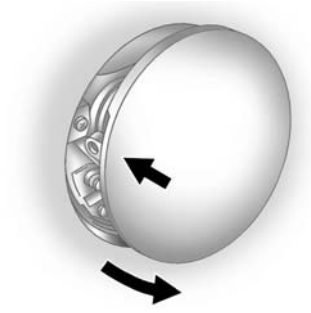

The fuel cap is behind a hinged fuel door on the passenger side of the vehicle. If equipped, the fuel door is locked when the vehicle doors are locked. Press 🔓 on the RKE transmitter to unlock. To open the fuel door, push and release the rearward center edge of the door.

Be careful not to spill fuel. Do not top off or overfill the tank and wait a few seconds after you have finished pumping before removing the nozzle. Clean fuel from painted surfaces as soon as possible. See *Exterior Care on page 10-100*.

When replacing the fuel cap, turn it clockwise until it clicks, otherwise the malfunction indicator lamp may turn on. The diagnostic system can determine if the fuel cap has been left off or improperly installed. This would allow fuel to evaporate into the atmosphere. See *Malfunction Indicator Lamp on page 5-16*.

⚠ Warning

If a fire starts while you are refueling, do not remove the nozzle. Shut off the flow of fuel by shutting off the pump or by notifying the station attendant. Leave the area immediately.

⚠ Caution

If a new fuel cap is needed, be sure to get the right type of cap from your dealer. The wrong type of fuel cap may not fit properly,

(Continued)

Caution (Continued)

may cause the malfunction indicator lamp to light, and could damage the fuel tank and emissions system. See *Malfunction Indicator Lamp on page 5-16*.

Filling a Portable Fuel Container

⚠ Warning

Filling a portable fuel container while it is in the vehicle can cause fuel vapors that can ignite either by static electricity or other means. You or others could be badly burned and the vehicle could be damaged. Always:

- Use approved fuel containers.

(Continued)

Warning (Continued)

- Remove the container from the vehicle, trunk, or pickup bed before filling.
- Place the container on the ground.
- Place the nozzle inside the fill opening of the container before dispensing fuel, and keep it in contact with the fill opening until filling is complete.
- Fill the container no more than 95% full to allow for expansion.
- Do not smoke, light matches, or use lighters while pumping fuel.
- Avoid using cell phones or other electronic devices.

Trailer Towing

General Towing Information

Only use towing equipment that has been designed for the vehicle. Contact your dealer or trailering dealer for assistance with preparing the vehicle for towing a trailer. Read the entire section before towing a trailer.

For towing a disabled vehicle, see *Towing the Vehicle on page 10-99*. For towing the vehicle behind another vehicle such as a motor home, see *Recreational Vehicle Towing on page 10-99*.

Driving Characteristics and Towing Tips

Driving with a Trailer

When towing a trailer:

- Become familiar with the state and local laws that apply specifically to trailer towing.

- Do not tow a trailer during the first 800 km (500 mi), to prevent damage to the engine, axle or other parts.
- Then, during the first 800 km (500 mi) trailer towing, do not drive over 80 km/h (50 mph) and do not make starts at full throttle.
- Vehicles with automatic transmissions can tow in D (Drive) but M (Manual Mode) is recommended. See *Manual Mode on page 9-31*. Use a lower gear if the transmission shifts too often. For vehicles with a manual transmission, it is better not to use the highest gear.
- Turn off Park Assist when towing.

⚠ Warning

When towing a trailer, exhaust gases may collect at the rear of the vehicle and enter if the liftgate, trunk/hatch, or rear-most window is open.

When towing a trailer:

- Do not drive with the liftgate, trunk/hatch, or rear-most window open.
- Fully open the air outlets on or under the instrument panel.
- Also adjust the Climate Control system to a setting that brings in only outside air. See “Climate Control Systems” in the Index.

For more information about Carbon Monoxide, see *Engine Exhaust on page 9-27*.

Towing a trailer requires a certain amount of experience. The combination you are driving is longer and not as responsive as the vehicle itself. Get acquainted with the handling and braking of the rig before setting out for the open road.

Before starting, check all trailer hitch parts and attachments, safety chains, electrical connectors, lamps, tires and mirrors. If the trailer has electric brakes, start the combination moving and then apply the trailer brake controller by hand to be sure the brakes work.

During the trip, check occasionally to be sure that the load is secure and the lamps and any trailer brakes still work.

Towing with a Stability Control System

When towing, the sound of the stability control system might be heard. The system is reacting to the vehicle movement caused by the

trailer, which mainly occurs during cornering. This is normal when towing heavier trailers.

Following Distance

Stay at least twice as far behind the vehicle ahead as you would when driving the vehicle without a trailer. This can help to avoid situations that require heavy braking and sudden turns.

Passing

More passing distance is needed when towing a trailer. Because the rig is longer, it is necessary to go farther beyond the passed vehicle before returning to the lane.

Backing Up

Hold the bottom of the steering wheel with one hand. To move the trailer to the left, move your hand to the left. To move the trailer to the right, move your hand to the right. Always back up slowly and, if possible, have someone guide you.

Making Turns

⚠ Caution

Making very sharp turns while trailering could cause the trailer to come in contact with the vehicle. The vehicle could be damaged. Avoid making very sharp turns while trailering.

When turning with a trailer, make wider turns than normal so the trailer will not strike soft shoulders, curbs, road signs, trees or other objects. Use the turn signal well in advance and avoid jerky or sudden maneuvers.

Turn Signals When Towing a Trailer

The turn signal indicators on the instrument cluster flash whenever signaling a turn or lane change. Properly hooked up, the trailer lamps also flash, telling other drivers the vehicle is turning, changing lanes or stopping.

When towing a trailer, the arrows on the instrument cluster flash for turns even if the bulbs on the trailer are burned out. Check occasionally to be sure the trailer bulbs are still working.

Driving on Grades

Reduce speed and shift to a lower gear before starting down a long or steep downgrade. If the transmission is not shifted down, the brakes might have to be used so much that they would get hot and no longer work well.

The vehicle can tow in D (Drive). Use a lower gear if the transmission shifts too often.

When towing at high altitude on steep uphill grades, engine coolant boils at a lower temperature than at normal altitudes. If the engine is turned off immediately after towing at high altitude on steep uphill

grades, the vehicle could show signs similar to engine overheating. To avoid this, let the engine run while parked, preferably on level ground, with the transmission in P (Park) for a few minutes before turning the engine off. If the overheat warning comes on, see *Engine Overheating on page 10-35*.

Parking on Hills

⚠ Warning

Parking the vehicle on a hill with the trailer attached can be dangerous. If something goes wrong, the rig could start to move. People can be injured, and both the vehicle and the trailer can be damaged. When possible, always park the rig on a flat surface.

If parking the rig on a hill:

1. Press the brake pedal, but do not shift into P (Park) yet. Turn the wheels into the curb if facing downhill or into traffic if facing uphill.
2. Have someone place chocks under the trailer wheels.
3. When the wheel chocks are in place, release the brake pedal until the chocks absorb the load.
4. Reapply the brake pedal. Then apply the parking brake and shift into P (Park) for vehicles with an automatic transmission or into gear for vehicles with a manual transmission.
5. Release the brake pedal.

Leaving After Parking on a Hill

1. Apply and hold the brake pedal while you:
   - Start the engine.
   - Shift into a gear.
   - Release the parking brake.
2. Let up on the brake pedal.
3. Drive slowly until the trailer is clear of the chocks.
4. Stop and have someone pick up and store the chocks.

Maintenance When Trailer Towing

The vehicle needs service more often when pulling a trailer. See the *Maintenance Schedule on page 11-2*. Things that are especially important in trailer operation are automatic transmission fluid, engine oil, axle lubricant, belts, cooling system and brake system. Inspect these before and during the trip.

Check periodically to see that all hitch nuts and bolts are tight.

Engine Cooling When Trailer Towing

The cooling system may temporarily overheat during severe operating conditions. See *Engine Overheating on page 10-35*.

Trailer Towing (ZL1 or Z/28)

The vehicle is neither designed nor intended to tow a trailer.

Trailer Towing (Except ZL1 or Z/28)

Before pulling a trailer, three important considerations have to do with weight:

- Weight of the trailer.
- Weight of the trailer tongue.
- Total weight on your vehicle's tires.

Weight of the Trailer

How heavy can a trailer safely be?

It should never weigh more than 454 kg (1,000 lb). But even that can be too heavy.

It depends on how the rig is used. For example, speed, altitude, road grades, outside temperature, and how much the vehicle is used to pull a trailer are all important. It can depend on any special equipment on the vehicle, and the amount of tongue weight the vehicle can carry. See “Weight of the Trailer Tongue” later in this section.

Maximum trailer weight is calculated assuming only the driver is in the tow vehicle and it has all the required trailering equipment. The weight of additional optional equipment, passengers, and cargo in the tow vehicle must be subtracted from the maximum trailer weight.

Ask your dealer for trailering information or advice, or write us at our Customer Assistance Offices. See *Customer Assistance Offices on page 13-3*.

Weight of the Trailer Tongue

The tongue load (1) of any trailer is an important weight to measure because it affects the total gross weight of the vehicle. The Gross Vehicle Weight (GVW) includes the curb weight of the vehicle, any cargo carried in it, and the people who will be riding in the vehicle. If there are a lot of options, equipment, passengers, or cargo in the vehicle, it will reduce the tongue weight the vehicle can carry, which will also reduce the trailer weight the vehicle can tow. If towing a trailer, the tongue load must be added to the GVW because the vehicle will be carrying that weight, too. See *Vehicle Load Limits on page 9-14*.

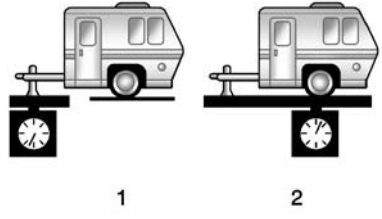

The trailer tongue (1) should weigh 10 % of the total loaded trailer weight (2).

After loading the trailer, weigh the trailer and then the tongue, separately, to see if the weights are proper. If they are not, adjustments might be made by moving some items around in the trailer.

Total Weight on Your Vehicle's Tires

Be sure the vehicle's tires are inflated to the upper limit for cold tires. These numbers can be found on the Tire and Loading Information label. See *Vehicle Load Limits on page 9-14*. Make sure not to go over the GVW limit for the vehicle, including the weight of the trailer tongue.

Towing Equipment

Hitches

Use the correct hitch equipment. See your dealer or a hitch dealer for assistance.

- The rear bumper on the vehicle is not intended for hitches. Do not attach rental hitches or other bumper-type hitches to it. Use only a frame-mounted hitch that does not attach to the bumper.
- Will any holes be made in the body of the vehicle when the trailer hitch is installed? If so, seal the holes when the hitch is removed. If the holes are not sealed, dirt, water, and deadly carbon monoxide (CO) from the exhaust can get into the vehicle. See *Engine Exhaust on page 9-27*.

Safety Chains

Always attach chains between the vehicle and the trailer. Cross the safety chains under the tongue of the trailer to help prevent the tongue from contacting the road if it becomes separated from the hitch. Leave enough slack so the rig can turn. Never allow safety chains to drag on the ground.

Trailer Brakes

Does the trailer have its own brakes? Be sure to read and follow the instructions for the trailer brakes so they are installed, adjusted, and maintained properly.

Because the vehicle has antilock brakes, do not tap into the vehicle's brake system. If this is done, both brake systems will not work well or at all.

Conversions and Add-Ons

Add-On Electrical Equipment

⚠ Caution

Some electrical equipment can damage the vehicle or cause components to not work and would not be covered by the warranty. Always check with your dealer before adding electrical equipment.

Add-on equipment can drain the vehicle's 12-volt battery, even if the vehicle is not operating.

The vehicle has an airbag system. Before attempting to add anything electrical to the vehicle, see *Servicing the Airbag-Equipped Vehicle on page 3-26* and *Adding Equipment to the Airbag-Equipped Vehicle on page 3-26*.

✍ NOTES

Vehicle Care

General Information

General Information 10-3
California Proposition 65 Warning 10-3
California Perchlorate Materials Requirements 10-3
Accessories and Modifications 10-3

Vehicle Checks

Doing Your Own Service Work 10-4
Hood 10-5
Engine Compartment Overview 10-6
Engine Cover 10-13
Engine Oil 10-15
Engine Oil Life System 10-19
Automatic Transmission Fluid 10-20
Manual Transmission Fluid 10-21
Hydraulic Clutch 10-21
Engine Air Cleaner/Filter (Except ZL1 and Z/28)) ... 10-21
Engine Air Cleaner/Filter (ZL1 Only) 10-23
Engine Air Cleaner/Filter (Z/28 Only) 10-24
Cooling System (Except ZL1 and Z/28 Engines) 10-25
Cooling System (ZL1 Engine Only) 10-27
Cooling System (Intercooler) 10-28
Cooling System (Z/28 Engine Only) 10-29
Engine Coolant 10-30
Engine Overheating 10-35
Power Steering Fluid (L99, LS3, ZL1 and Z/28) 10-36
Power Steering Fluid (LFX) 10-36
Washer Fluid 10-37
Brakes 10-38
Brake Fluid 10-39
Battery 10-41
Rear Axle 10-41
Starter Switch Check 10-41
Automatic Transmission Shift Lock Control Function Check 10-42
Ignition Transmission Lock Check 10-42
Park Brake and P (Park) Mechanism Check 10-43
Wiper Blade Replacement 10-43
Windshield Replacement ... 10-44

Headlamp Aiming

Headlamp Aiming 10-44

Bulb Replacement

Bulb Replacement 10-44
Halogen Bulbs 10-44
High Intensity Discharge (HID) Lighting 10-45
Headlamps, Front Turn Signal and Parking Lamps (Uplevel Vehicle) 10-45
Headlamps, Front Turn Signal and Parking Lamps (Base Vehicle) 10-46
Taillamps, Turn Signal, and Stoplamps 10-46
License Plate Lamp 10-47
Replacement Bulbs 10-48

Electrical System

Electrical System Overload 10-48
Fuses and Circuit Breakers 10-49

Engine Compartment Fuse Block 10-49
Instrument Panel Fuse Block 10-52
Rear Compartment Fuse Block 10-54

Wheels and Tires

Tires 10-56
All-Season Tires 10-57
Winter Tires 10-57
Low-Profile Tires 10-57
Competition Oriented Tires 10-58
Summer Tires 10-59
Tire Sidewall Labeling 10-59
Tire Designations 10-61
Tire Terminology and Definitions 10-62
Tire Pressure 10-65
Tire Pressure for High-Speed Operation 10-66
Tire Pressure Monitor System 10-67
Tire Pressure Monitor Operation 10-68
Tire Inspection 10-71
Tire Rotation 10-71
When It Is Time for New Tires 10-73
Buying New Tires 10-74
Different Size Tires and Wheels 10-75
Uniform Tire Quality Grading 10-76
Wheel Alignment and Tire Balance 10-77
Wheel Replacement 10-78
Tire Chains 10-79
If a Tire Goes Flat 10-79
Tire Sealant and Compressor Kit 10-81
Storing the Tire Sealant and Compressor Kit 10-88
Tire Changing 10-89
Compact Spare Tire 10-95

Jump Starting

Jump Starting 10-96

Towing the Vehicle

Towing the Vehicle 10-99
Recreational Vehicle Towing 10-99

Appearance Care

Exterior Care 10-100
Interior Care 10-105
Floor Mats 10-109

General Information

For service and parts needs, visit your dealer. You will receive genuine GM parts and GM-trained and supported service people.

Genuine GM parts have one of these marks:

California Proposition 65 Warning

Most motor vehicles, including this one, contain and/or emit chemicals known to the State of California to cause cancer and birth defects or other reproductive harm. Engine exhaust, many parts and systems, many fluids, and some component wear by-products contain and/or emit these chemicals.

California Perchlorate Materials Requirements

Certain types of automotive applications, such as airbag initiators, safety belt pretensioners, and lithium batteries contained in Remote Keyless Entry transmitters, may contain perchlorate materials. Special handling may be necessary. For additional information, see www.dtsc.ca.gov/hazardouswaste/perchlorate.

Accessories and Modifications

Adding non-dealer accessories or making modifications to the vehicle can affect vehicle performance and safety, including such things as airbags, braking, stability, ride and handling, emissions systems, aerodynamics, durability, and electronic systems like antilock brakes, traction control, and stability control. These accessories or modifications could even cause malfunction or damage not covered by the vehicle warranty.

Damage to vehicle components resulting from modifications or the installation or use of non-GM certified parts, including control module or software modifications, is not covered under the terms of the vehicle warranty and may affect remaining warranty coverage for affected parts.

GM Accessories are designed to complement and function with other systems on the vehicle. See your dealer to accessorize the vehicle using genuine GM Accessories installed by a dealer technician.

Also, see *Adding Equipment to the Airbag-Equipped Vehicle on page 3-26*.

⚠ Caution

If equipped with the 1LE, ZL1, or Z/28 package, or any accessory ground effects package, use care when approaching curbs, ramps, and other road obstructions due to reduced ground clearance.

Vehicle Checks

Doing Your Own Service Work

⚠ Warning

It can be dangerous to work on your vehicle if you do not have the proper knowledge, service manual, tools, or parts. Always follow owner manual procedures and consult the service manual for your vehicle before doing any service work.

If doing some of your own service work, use the proper service manual. It tells you much more about how to service the vehicle than this manual can. To order the proper service manual, see *Service Publications Ordering Information on page 13-11*.

This vehicle has an airbag system. Before attempting to do your own service work, see *Servicing the Airbag-Equipped Vehicle on page 3-26*.

Keep a record with all parts receipts and list the mileage and the date of any service work performed. See *Maintenance Records on page 11-16*.

⚠ Caution

Even small amounts of contamination can cause damage to vehicle systems. Do not allow contaminants to contact the fluids, reservoir caps, or dipsticks.

Hood

To open the hood:

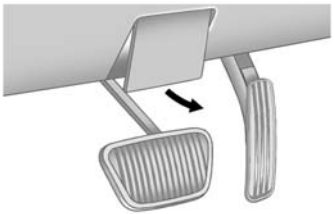

1. Pull the release handle below the instrument panel to the left of the steering wheel.

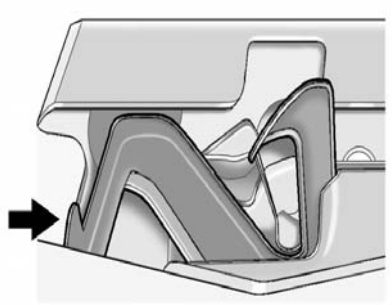

2. Push the secondary hood release to the right. The lever is near the middle of the hood.
3. Lift the hood.

Before closing the hood, be sure all filler caps are on properly. Then lift the hood to relieve pressure. Pull the hood down on the passenger side to close it firmly.

Engine Compartment Overview

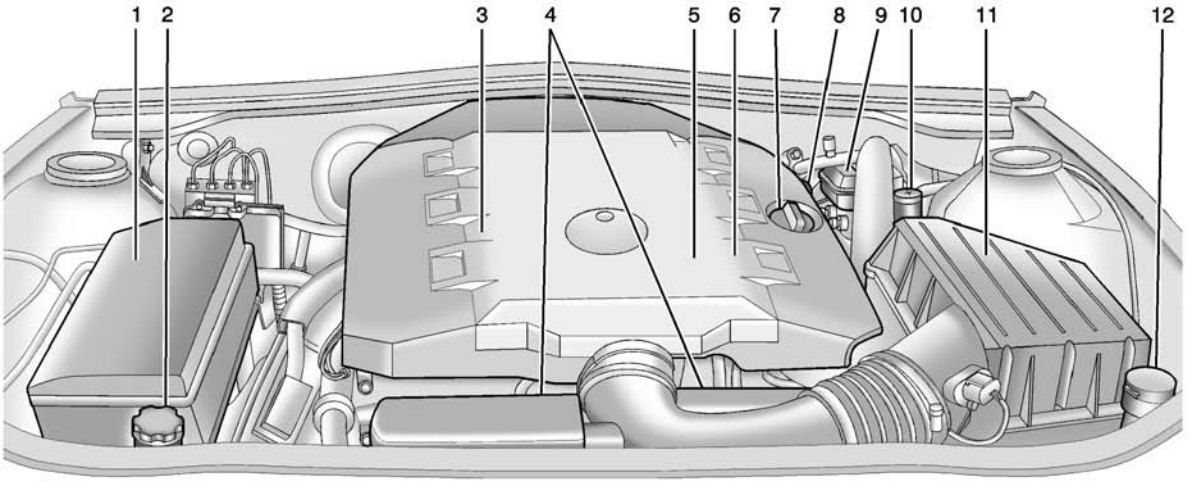

3.6L V6 Engine

1. Underhood Electrical Center. See *Engine Compartment Fuse Block on page 10-49*.
2. Engine Coolant Recovery Bottle and Cap. See *Engine Coolant on page 10-30*.
3. *Engine Cover on page 10-13*.
4. Engine Cooling Fans (Out of View). See *Cooling System (Except ZL1 and Z/28 Engines) on page 10-25* or *Cooling System (ZL1 Engine Only) on page 10-27* or *Cooling System (Intercooler) on page 10-28* or *Cooling System (Z/28 Engine Only) on page 10-29*.
5. Radiator Fill Cap (Out of View). See *Engine Coolant on page 10-30*.
6. Power Steering Reservoir and Cap (Out of View). See *Power Steering Fluid (L99, LS3, ZL1 and Z/28) on page 10-36* or *Power Steering Fluid (LFX) on page 10-36*.
7. Engine Oil Fill Cap. See *Engine Oil on page 10-15*.
8. Engine Oil Dipstick (Out of View). See *Engine Oil on page 10-15*.
9. Brake Fluid and Hydraulic Clutch Reservoir (If Equipped with Manual Transmission). See *Brakes on page 10-38* or *Hydraulic Clutch on page 10-21*.
10. Remote Positive (+) Terminal. See *Battery on page 10-41*.
11. *Engine Air Cleaner/Filter (Except ZL1 and Z/28)) on page 10-21* or *Engine Air Cleaner/Filter (ZL1 Only) on page 10-23* or *Engine Air Cleaner/Filter (Z/28 Only) on page 10-24*.
12. Windshield Washer Fluid Reservoir. See *Washer Fluid on page 10-37*.

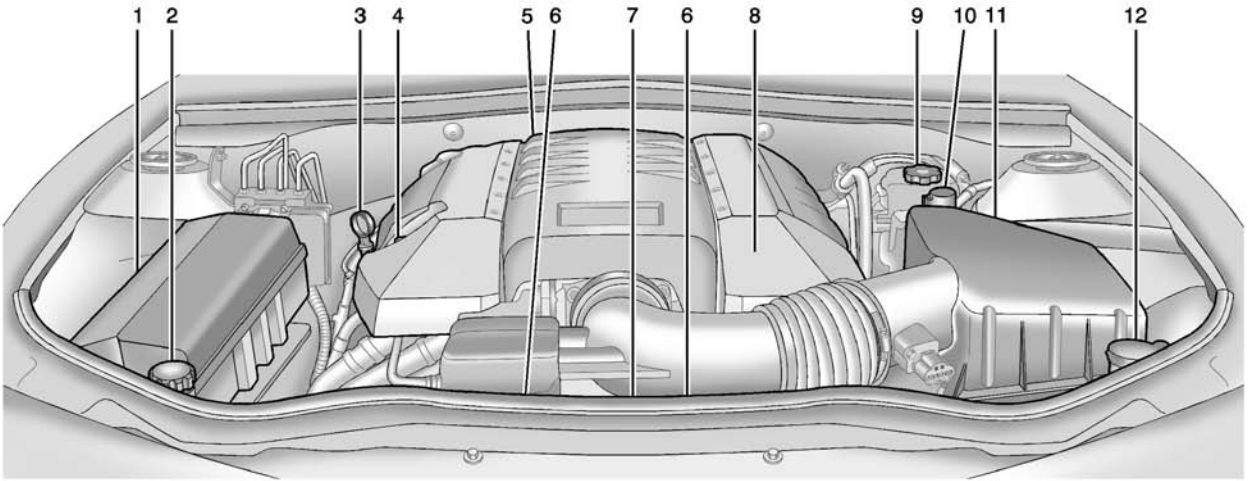

6.2L V8 Engine (L99 Engine Shown, LS3 Similar)

1. Underhood Electrical Center. See *Engine Compartment Fuse Block on page 10-49*.
2. Engine Coolant Recovery Bottle and Cap. See *Engine Coolant on page 10-30*.
3. Engine Oil Dipstick. See *Engine Oil on page 10-15*.
4. Engine Oil Fill Cap (Out of View). See *Engine Oil on page 10-15*.
5. *Engine Cover on page 10-13*.
6. Engine Cooling Fans (Out of View). See *Cooling System (Except ZL1 and Z/28 Engines) on page 10-25* or *Cooling System (ZL1 Engine Only) on page 10-27* or *Cooling System (Intercooler) on page 10-28* or *Cooling System (Z/28 Engine Only) on page 10-29*.
7. Radiator Fill Cap (Out of View). See *Engine Coolant on page 10-30*.
8. Power Steering Reservoir and Cap (Under Engine Cover) (if equipped). See *Power Steering Fluid (L99, LS3, ZL1 and Z/28) on page 10-36* or *Power Steering Fluid (LFX) on page 10-36*.
9. Brake Fluid and Hydraulic Clutch Reservoir (If Equipped with Manual Transmission). See *Brakes on page 10-38* or *Hydraulic Clutch on page 10-21*.
10. Remote Positive (+) Terminal. See *Battery on page 10-41*.
11. *Engine Air Cleaner/Filter (Except ZL1 and Z/28)) on page 10-21* or *Engine Air Cleaner/Filter (ZL1 Only) on page 10-23* or *Engine Air Cleaner/Filter (Z/28 Only) on page 10-24*.
12. Windshield Washer Fluid Reservoir. See *Washer Fluid on page 10-37*.

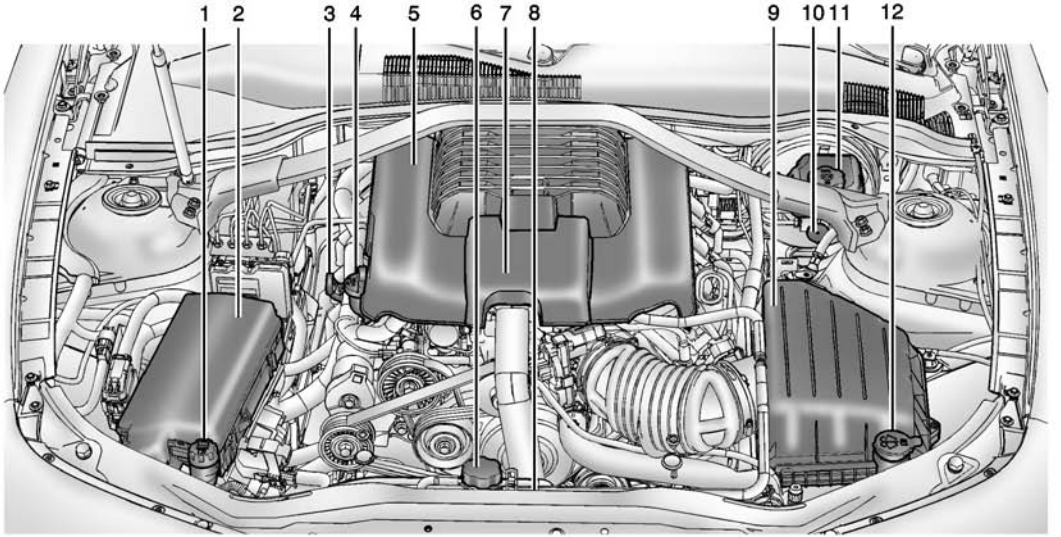

6.2L V8 Engine (ZL1)

1. Engine Coolant Recovery Bottle and Cap. See *Engine Coolant on page 10-30*.
2. Underhood Electrical Center. See *Engine Compartment Fuse Block on page 10-49*.
3. Engine Oil Dipstick. See *Engine Oil on page 10-15*.
4. Engine Oil Fill Cap (Out of View). See *Engine Oil on page 10-15*.
5. *Engine Cover on page 10-13*.
6. Radiator Fill Cap. See *Engine Coolant on page 10-30*.
7. Intercooler Fill Cap (Out of View). See *Cooling System (Except ZL1 and Z/28 Engines) on page 10-25* or *Cooling System (ZL1 Engine Only) on page 10-27* or *Cooling System (Intercooler) on page 10-28* or *Cooling System (Z/28 Engine Only) on page 10-29*.
8. Engine Cooling Fans (Out of View). See *Cooling System (Except ZL1 and Z/28 Engines) on page 10-25* or *Cooling System (ZL1 Engine Only) on page 10-27* or *Cooling System (Intercooler) on page 10-28* or *Cooling System (Z/28 Engine Only) on page 10-29*.
9. *Engine Air Cleaner/Filter (Except ZL1 and Z/28)) on page 10-21* or *Engine Air Cleaner/Filter (ZL1 Only) on page 10-23* or *Engine Air Cleaner/Filter (Z/28 Only) on page 10-24*.
10. Remote Positive (+) Terminal. See *Battery on page 10-41*.
11. Brake Fluid and Hydraulic Clutch Reservoir (If Equipped with Manual Transmission). See *Brakes on page 10-38* or *Hydraulic Clutch on page 10-21*.
12. Windshield Washer Fluid Reservoir. See *Washer Fluid on page 10-37*.

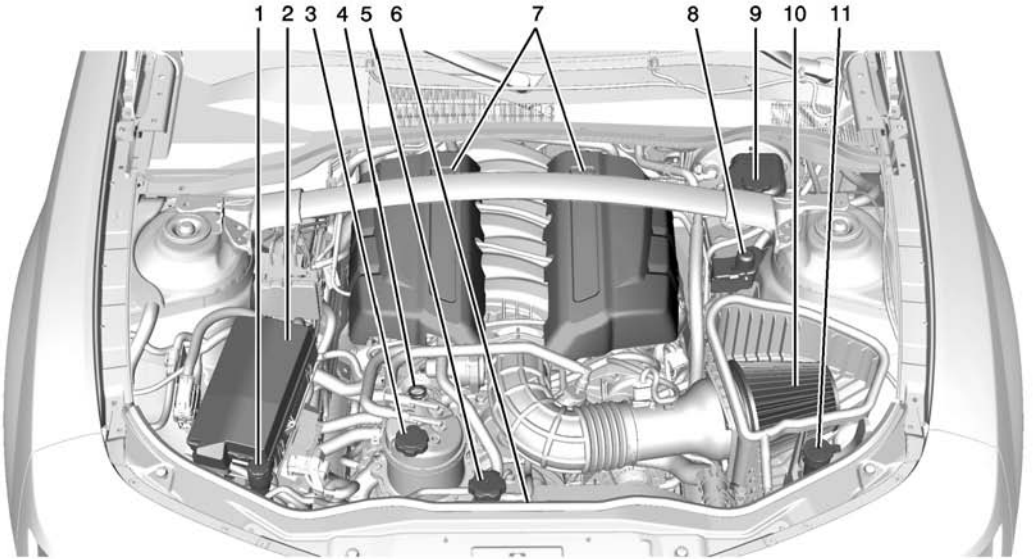

7.0L V8 Engine (Z/28)

1. Engine Coolant Recovery Bottle and Cap. See *Engine Coolant on page 10-30*.
2. Underhood Electrical Center. See *Engine Compartment Fuse Block on page 10-49*.
3. Engine Oil Reservoir and Oil Fill Cap. See *Engine Oil on page 10-15*.
4. Engine Oil Dipstick. See *Engine Oil on page 10-15*.
5. Radiator Fill Cap. See *Engine Coolant on page 10-30*.
6. Engine Cooling Fans (Out of View). See *Cooling System (Except ZL1 and Z/28 Engines) on page 10-25* or *Cooling System (ZL1 Engine Only) on page 10-27* or *Cooling System (Intercooler) on page 10-28* or *Cooling System (Z/28 Engine Only) on page 10-29*.
7. *Engine Cover on page 10-13*.
8. Remote Positive (+) Terminal. See *Battery on page 10-41*.
9. Brake Fluid and Hydraulic Clutch Reservoir. See *Brakes on page 10-38* or *Hydraulic Clutch on page 10-21*.
10. *Engine Air Cleaner/Filter (Except ZL1 and Z/28)) on page 10-21* or *Engine Air Cleaner/Filter (ZL1 Only) on page 10-23* or *Engine Air Cleaner/Filter (Z/28 Only) on page 10-24*.
11. Windshield Washer Fluid Reservoir. See *Washer Fluid on page 10-37*.

Engine Cover

3.6L V6 Engine Cover

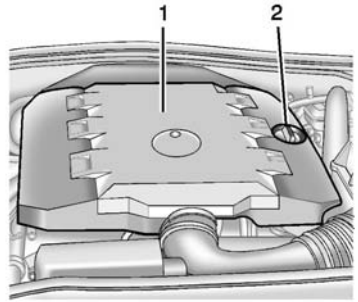

1. Engine Cover
2. Engine Oil Fill Cap

To remove:

1. Remove the engine oil fill cap (2).
2. Lift the engine cover (1) to disengage one front attachment point.

3. Pull the engine cover forward to disengage it from the two rear tabs.
4. Reverse Steps 1–3 to reinstall the engine cover.

6.2L V8 Engine Cover (L99 Engine Shown, LS3 Similar)

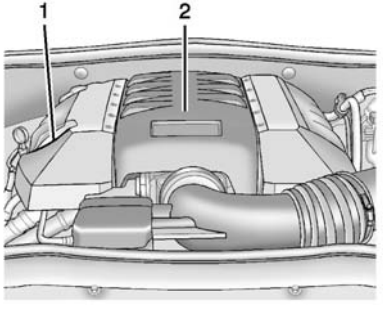

1. Engine Oil Fill Cap
2. Engine Cover

To remove:

1. Remove the engine oil fill cap (1).
2. Lift the engine cover (2) to disengage the two front attachment points.
3. Pull the engine cover forward to disengage it from the horizontal rear attachments.
4. Reverse Steps 1–3 to reinstall the engine cover.

6.2L V8 Engine Cover (ZL1 Only)

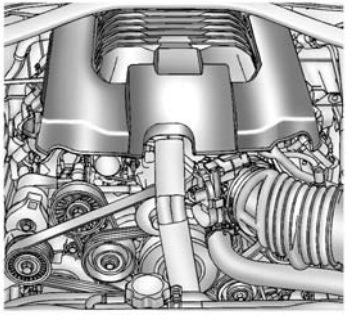

To remove:

1. Lift the engine cover to disengage from the five attachment points.
2. Pull the engine cover forward to remove.
3. Reverse the steps to reinstall the engine cover.

7.0L V8 Engine (Z/28)

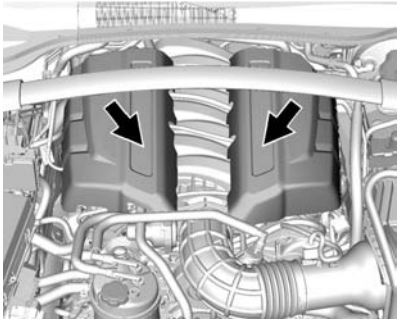

To remove the engine covers:

1. Lift the outboard edge of each engine cover to disengage from two of the four attachment points.
2. Lift the inboard edge of each engine cover to disengage from two of the four attachment points.
3. Pull each engine cover forward to remove.
4. Reverse Steps 1–3 to reinstall each engine cover.

Engine Oil

To ensure proper engine performance and long life, careful attention must be paid to engine oil. Following these simple, but important steps will help protect your investment:

- Always use engine oil approved to the proper specification and of the proper viscosity grade. See “Selecting the Right Engine Oil” in this section.
- Check the engine oil level regularly and maintain the proper oil level. See “Checking Engine Oil” and “When to Add Engine Oil” in this section.
- Change the engine oil at the appropriate time. See *Engine Oil Life System on page 10-19*.
- Always dispose of engine oil properly. See “What to Do with Used Oil” in this section.

Checking Engine Oil (Except Z/28)

It is a good idea to check the engine oil level at each fuel fill. In order to get an accurate reading, the vehicle must be on level ground. The engine oil dipstick handle is a loop. See *Engine Compartment Overview on page 10-6* for the location of the engine oil dipstick.

Obtaining an accurate oil level reading is essential:

1. If the engine has been running recently, turn off the engine and allow several minutes for the oil to drain back into the oil pan. Checking the oil level too soon after engine shutoff will not provide an accurate oil level reading.

⚠ Warning

The engine oil dipstick handle may be hot; it could burn you. Use a towel or glove to touch the dipstick handle.

2. Pull out the dipstick and wipe it with a clean paper towel or cloth, then push it back in all the way. Remove it again, keeping the tip down, and check the level.

When to Add Engine Oil (Except Z/28)

If the oil is below the cross-hatched area at the tip of the dipstick, add 1 L (1 qt) of the recommended oil and then recheck the level. See "Selecting the Right Engine Oil" in this section for an explanation of what kind of oil to use. For engine oil crankcase capacity, see *Capacities and Specifications on page 12-2*.

⚠ Caution

Do not add too much oil. Oil levels above or below the acceptable operating range shown on the dipstick are harmful

(Continued)

Caution (Continued)

to the engine. If you find that you have an oil level above the operating range, i.e., the engine has so much oil that the oil level gets above the cross-hatched area that shows the proper operating range, the engine could be damaged. You should drain out the excess oil or limit driving of the vehicle and seek a service professional to remove the excess amount of oil.

See *Engine Compartment Overview on page 10-6* for the location of the engine oil fill cap.

Add enough oil to put the level somewhere in the proper operating range. Push the dipstick all the way back in when through.

Checking Engine Oil (Z/28)

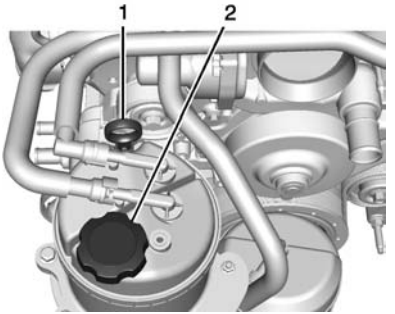

1. Engine Oil Dipstick
2. Engine Oil Fill Cap

It is a good idea to check the engine oil level at each fuel fill. In order to get an accurate reading, the vehicle must be on level ground.

The engine oil dipstick handle is a loop. The dipstick is on the dry sump engine oil tank. See *Engine Compartment Overview on page 10-6* for the location of the dry sump engine oil tank.

These vehicles have a dry sump engine lubrication system. This high performance system operates differently than a standard engine lubrication system and requires a special procedure when checking the engine oil level. Follow this procedure closely.

The engine oil level must be checked when the engine is warm. Cold oil level in the dry sump tank may not indicate the actual amount of oil in the system. With this system, engine oil is contained in an external tank, separate from the engine. Under normal operating conditions, the oil pan under the engine does not store any oil. If the vehicle has been parked for an extended period without the engine being started, some oil will seep back into the oil pan, reducing the amount of oil held in the dry sump tank and there could be no engine oil at all showing on the dipstick. This is normal since the dipstick is designed to read the engine oil level only after the engine has run long enough to reach normal operating temperature. Do not add engine oil based on cold engine dipstick readings. The engine oil level on the dipstick will also be inaccurate if checked while the engine is running.

1. To obtain an accurate engine oil level reading, warm up the engine to at least 80°C (175°F). Cold oil will not give a correct oil level reading.
2. Once the engine is warm, turn off the engine. Checking the oil while the engine is running will result in an incorrect oil level reading.
3. Check the oil level between five and 10 minutes after the engine is shut down.

⚠ Warning

The engine oil dipstick handle may be hot; it could burn you. Use a towel or glove to touch the dipstick handle.

4. Remove the dipstick from the external engine oil tank and wipe it with a clean lint-free paper towel or a cloth. Re-insert the dipstick into the external oil tank, pushing it all the way in until it stops.
5. Remove the dipstick from the oil tank and read the level on the cross-hatched area.

When to Add Engine Oil (Z/28)

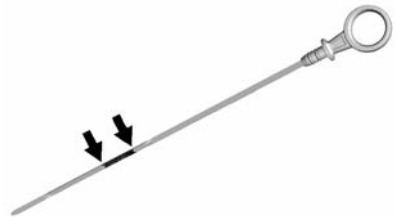

If the oil is below the cross-hatched area at the tip of the dipstick, add 1 L (1 qt) of the recommended oil through the oil fill cap opening in the oil tank and then recheck the level. See “Selecting the Right Engine Oil”

for an explanation of what kind of oil to use. For engine oil crankcase capacity, see *Capacities and Specifications on page 12-2*.

⚠ Caution

Do not add too much oil. Oil levels above or below the acceptable operating range shown on the dipstick are harmful to the engine. If you find that you have an oil level above the operating range, i.e., the engine has so much oil that the oil level gets above the cross-hatched area that shows the proper operating range, the engine could be damaged. You should drain out the excess oil or limit driving of the vehicle and seek a service professional to remove the excess amount of oil.

See *Engine Compartment Overview on page 10-6* for the location of the external engine oil tank and fill cap.

Add enough oil to put the level somewhere in the proper operating range. Push the dipstick all the way back into the oil tank when through.

Selecting the Right Engine Oil

Selecting the right engine oil depends on both the proper oil specification and viscosity grade. See *Recommended Fluids and Lubricants on page 11-12*.

Specification

Use and ask for licensed engine oils with the dexos1® approved certification mark. Engine oils meeting the requirements for the vehicle should have the dexos1 approved certification mark. This certification mark indicates that the oil has been approved to the dexos1 specification. See www.gmdexos.com. Camaro recommends Mobil 1® engine oils that meet the requirements of the dexos1 specification for its dry sump equipped engines.

⚠ Caution

Failure to use the recommended engine oil can result in engine damage not covered by the vehicle warranty. Check with your dealer or service provider on whether the oil is approved to the dexos1 specification.

Viscosity Grade

Use SAE 5W-30 viscosity grade engine oil.

Cold Temperature Operation: In an area of extreme cold, where the temperature falls below −29°C (−20°F), an SAE 0W-30 oil may be used. An oil of this viscosity grade will provide easier cold starting for the engine at extremely low

temperatures. When selecting an oil of the appropriate viscosity grade, always select an oil of the correct specification. See “Specification” earlier in this section for more information.

On Z/28, for track events or competitive driving, use Mobil 1® 15W-50 engine oil. A warning message will display at high oil temperatures. See *Engine Oil Messages on page 5-35*.

Engine Oil Additives/Engine Oil Flushes

Do not add anything to the oil. The recommended oils with the dexos specification and displaying the dexos certification mark are all that is needed for good performance and engine protection.

Engine oil system flushes are not recommended and could cause engine damage not covered by the vehicle warranty.

What to Do with Used Oil

Used engine oil contains certain elements that can be unhealthy for your skin and could even cause cancer. Do not let used oil stay on your skin for very long. Clean your skin and nails with soap and water, or a good hand cleaner. Wash or properly dispose of clothing or rags containing used engine oil. See the manufacturer's warnings about the use and disposal of oil products.

Used oil can be a threat to the environment. If you change your own oil, be sure to drain all the oil from the filter before disposal. Never dispose of oil by putting it in the trash or pouring it on the ground, into sewers, or into streams or bodies of water. Recycle it by taking it to a place that collects used oil.

Engine Oil Life System

When to Change Engine Oil

This vehicle has a computer system that indicates when to change the engine oil and filter. This is based on a combination of factors which include engine revolutions, engine temperature, and miles driven. Based on driving conditions, the mileage at which an oil change is indicated can vary considerably. For the oil life system to work properly, the system must be reset every time the oil is changed.

When the system has calculated that oil life has been diminished, it indicates that an oil change is necessary. A CHANGE ENGINE OIL SOON message comes on. See *Engine Oil Messages on page 5-35*. Change the oil as soon as possible within the next 1 000 km (600 mi). It is possible that, if driving under the best conditions, the oil life system might indicate that an oil change is not necessary for up to a year. The engine oil and filter must

be changed at least once a year and, at this time, the system must be reset. Your dealer has trained service people who will perform this work and reset the system. It is also important to check the oil regularly over the course of an oil drain interval and keep it at the proper level.

If the system is ever reset accidentally, the oil must be changed at 5 000 km (3,000 mi) since the last oil change. Remember to reset the oil life system whenever the oil is changed.

How to Reset the Engine Oil Life System

Reset the system whenever the engine oil is changed so that the system can calculate the next engine oil change. To reset the system:

1. Display the REMAINING OIL LIFE on the DIC. See *Driver Information Center (DIC) on page 5-24*.
2. Press and hold the SET/CLR button on the DIC while the Oil Life display is active. The oil life will change to 100%.

The oil life system can also be reset as follows:

1. Turn the ignition to ON/RUN with the engine off.
2. Fully press and release the accelerator pedal three times within five seconds.

The system is reset when the CHANGE ENGINE OIL SOON message goes off.

If the CHANGE ENGINE OIL SOON message comes back on when the vehicle is started, the engine oil life system has not been reset. Repeat the procedure.

Automatic Transmission Fluid

How to Check Automatic Transmission Fluid

It is not necessary to check the transmission fluid level.
A transmission fluid leak is the only reason for fluid loss. If a leak occurs, take the vehicle to your dealer and have it repaired as soon as possible.

The vehicle is not equipped with a transmission fluid level dipstick. There is a special procedure for checking and changing the transmission fluid. Because this procedure is difficult, this should be done at the dealer. Contact the dealer for additional information or the procedure can be found in the service manual. To purchase a service manual, see *Service Publications Ordering Information on page 13-11*.

Change the fluid and filter at the intervals listed in *Maintenance Schedule on page 11-2*, and be sure to use the fluid listed in *Recommended Fluids and Lubricants on page 11-12*.

Manual Transmission Fluid

It is not necessary to check the manual transmission fluid level. A transmission fluid leak is the only reason for fluid loss. If a leak occurs, take the vehicle to your dealer and have it repaired as soon as possible. See *Recommended Fluids and Lubricants on page 11-12* for the proper fluid to use.

Hydraulic Clutch

For vehicles with a manual transmission, it is not necessary to regularly check brake/clutch fluid unless there is a leak suspected. Adding fluid will not correct a leak. A fluid loss in this system could indicate a problem. Have the system inspected and repaired.

When to Check and What to Use

The brake/hydraulic clutch fluid reservoir cap has this symbol on it. The common hydraulic clutch and brake master cylinder fluid reservoir is filled with DOT 3 brake fluid as indicated on the reservoir cap. See *Engine Compartment Overview on page 10-6* for reservoir location.

How to Check and Add Fluid

Visually check the brake/clutch fluid reservoir to make sure the fluid level is at the MIN (minimum) line on the side of the reservoir. The brake/hydraulic clutch fluid system should be closed and sealed.

Do not remove the cap to check the fluid level or to top-off the fluid level. Remove the cap only when necessary to add the proper fluid until the level reaches the MIN line.

Engine Air Cleaner/Filter (Except ZL1 and Z/28))

See *Engine Compartment Overview on page 10-6* for the location of the engine air cleaner/filter.

When to Inspect the Engine Air Cleaner/Filter

Inspect the air cleaner/filter at the scheduled maintenance intervals and replace it at the appropriate interval. See *Maintenance Schedule on page 11-2* for more information. If driving in dusty/dirty conditions, inspect the filter at each engine oil change.

How to Inspect the Engine Air Cleaner/Filter

To inspect the air cleaner/filter, remove the filter from the vehicle and lightly shake the filter to release loose dust and dirt. If the filter remains covered with dirt, a new filter is required.

To inspect or replace the engine air cleaner/filter:

1. Open the hood. See *Hood on page 10-5*.
2. Locate the air filter housing on the front of the driver side of the engine compartment. See *Engine Compartment Overview on page 10-6*.

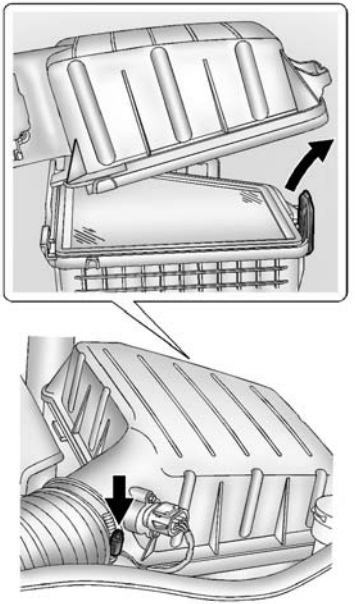

3.6L V6 Engine Air Cleaner/Filter Housing Shown (6.2L V8 Engines Similar)

3. Loosen the clamp at the duct of the air cleaner/filter housing.
4. Unlatch the retaining clips on the air cleaner/filter housing.
5. Lift the cover at the retaining clip location high enough to clear the retaining clips and pull the cover outward to remove it from the air cleaner/filter housing hinges.
6. Pull straight up on the cover; while holding the cover, remove the air filter.
7. Inspect or replace the air filter. See *Maintenance Replacement Parts on page 11-14*.
8. Reverse Steps 1–6 to reinstall the cover.

⚠ Warning

Operating the engine with the air cleaner/filter off can cause you or others to be burned. The air cleaner not only cleans the air; it helps to stop flames if the engine backfires. Use caution when working on the engine and do not drive with the air cleaner/filter off.

⚠ Caution

If the air cleaner/filter is off, dirt can easily get into the engine, which could damage it. Always have the air cleaner/filter in place when you are driving.

Engine Air Cleaner/Filter (ZL1 Only)

See *Engine Compartment Overview on page 10-6* for the location of the engine air cleaner/filter.

⚠ Caution

If water is sprayed and enters the engine air cleaner/filter intake and housing, the engine could be damaged. The repairs would not be covered by the vehicle warranty.

When to Inspect the Engine Air Cleaner/Filter

Inspect the air cleaner/filter at the scheduled maintenance intervals and replace it at the appropriate interval. See *Maintenance Schedule on page 11-2* for more information. If driving in dusty/dirty conditions, inspect the filter at each engine oil change.

How to Inspect the Engine Air Cleaner/Filter

To inspect the air cleaner/filter, remove the filter from the vehicle and lightly shake the filter to release loose dust and dirt. If the filter remains covered with dirt, a new filter is required.

To inspect or replace the engine air cleaner/filter:

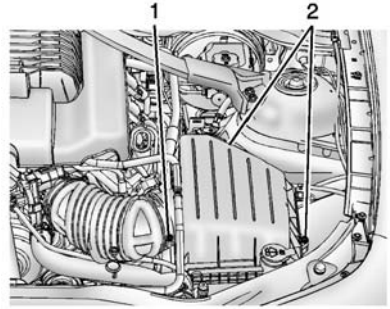

1. Air Duct Clamp
2. Screws

1. Open the hood. See *Hood on page 10-5*.
2. Disconnect the outlet duct by loosening the screw on the air duct clamp.

3. Remove the two screws securing the cover on the air cleaner/filter housing.
4. Pull straight up on the cover; while holding the cover, remove the air filter.
5. Inspect or replace the air filter. See *Maintenance Replacement Parts on page 11-14*.
6. Reverse Steps 2–5 to reinstall the cover.

⚠ Warning

Operating the engine with the air cleaner/filter off can cause you or others to be burned. The air cleaner not only cleans the air; it helps to stop flames if the engine backfires. Use caution when working on the engine and do not drive with the air cleaner/filter off.

⚠ Caution

If the air cleaner/filter is off, dirt can easily get into the engine, which could damage it. Always have the air cleaner/filter in place when you are driving.

Engine Air Cleaner/Filter (Z/28 Only)

See *Engine Compartment Overview on page 10-6* for the location of the engine air cleaner/filter.

⚠ Caution

If water is sprayed and enters the engine air cleaner/filter intake and housing, the engine could be damaged. The repairs would not be covered by the vehicle warranty.

When to Inspect the Engine Air Cleaner/Filter

Inspect the air cleaner/filter at the scheduled maintenance intervals and replace it at the appropriate interval. See *Maintenance Schedule on page 11-2* for more information. If driving in dusty/dirty conditions, inspect the filter at each engine oil change.

How to Inspect the Engine Air Cleaner/Filter

To inspect the air cleaner/filter, remove the filter from the vehicle and lightly shake the filter to release loose dust and dirt. If the filter remains covered with dirt, a new filter is required.

To inspect or replace the engine air cleaner/filter:

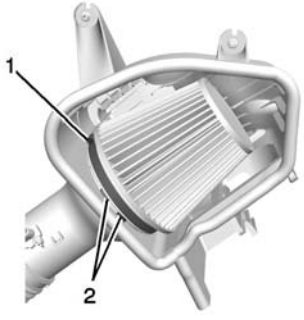

1. Air Cleaner/Filter Clamp
2. Air Cleaner/Filter Alignment Tabs

1. Open the hood. See *Hood on page 10-5*.
2. Loosen the screw on the air cleaner/filter clamp (1).
3. Remove the filter by moving it outward while tipping it upward from the mass air flow sensor air tube.
4. Inspect or replace the air filter. See *Maintenance Replacement Parts on page 11-14*.
5. Using the same air filter/cleaner clamp (1), install the air cleaner/filter. Make sure that the air cleaner/filter alignment tabs (2) are set properly, and tighten the screw on the clamp.

⚠ Warning

Operating the engine with the air cleaner/filter off can cause you or others to be burned. The air cleaner not only cleans the air; it helps to stop flames if the engine backfires. Use caution when working on the engine and do not drive with the air cleaner/filter off.

⚠ Caution

If the air cleaner/filter is off, dirt can easily get into the engine, which could damage it. Always have the air cleaner/filter in place when you are driving.

Cooling System (Except ZL1 and Z/28 Engines)

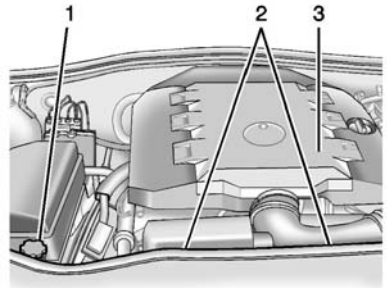

3.6L V6 Engine

1. Engine Coolant Recovery Bottle

2. Electric Cooling Fans (Out of View)
3. Radiator Cap (Under Engine Cover)

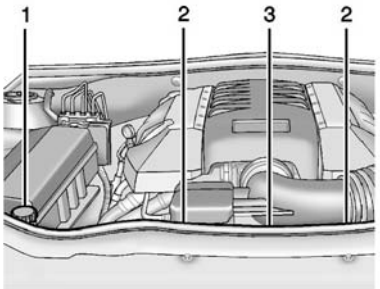

6.2L V8 Engines (L99 Shown, LS3 Similar)

1. Engine Coolant Recovery Bottle
2. Electric Cooling Fans (Out of View)
3. Radiator Cap (Out of View)

⚠ Warning

An electric engine cooling fan under the hood can start up even when the engine is not running and can cause injury. Keep hands, clothing, and tools away from any underhood electric fan.

If the coolant inside the engine coolant recovery bottle is boiling, do not do anything else until it cools down. The vehicle should be parked on a level surface.

The coolant level should be between the MIN and MAX lines. If it is not, the vehicle may have a leak at the radiator hoses, heater hoses, radiator, water pump, or somewhere else in the cooling system.

⚠ Warning

Heater and radiator hoses, and other engine parts, can be very hot. Do not touch them. If you do, you can be burned.

Do not run the engine if there is a leak. If you run the engine, it could lose all coolant. That could cause an engine fire, and you could be burned. Get any leak fixed before you drive the vehicle.

If there seems to be no leak, with the engine on, check to see if the electric engine cooling fans are running. If the engine is overheating, the fans should be running. If it is not, the vehicle needs service. Turn off the engine.

⚠ Caution

Using coolant other than DEX-COOL® can cause premature engine, heater core, or radiator corrosion. In addition, the engine coolant could require changing sooner. Any repairs would not be covered by the vehicle warranty. Always use DEX-COOL (silicate-free) coolant in the vehicle.

Cooling System (ZL1 Engine Only)

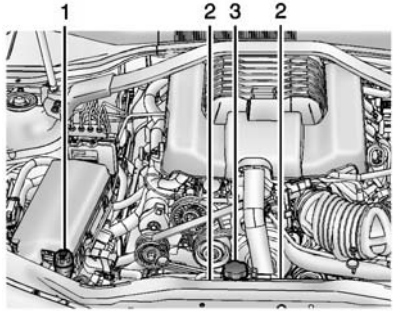

6.2L V8 Engine

1. Engine Coolant Recovery Bottle
2. Electric Cooling Fans (Out of View)
3. Radiator Cap

⚠ Warning

An electric engine cooling fan under the hood can start up even when the engine is not running and can cause injury. Keep hands, clothing, and tools away from any underhood electric fan.

If the coolant inside the engine coolant recovery bottle is boiling, do not do anything else until it cools down. The vehicle should be parked on a level surface.

The coolant level should be between the MIN and MAX lines. If it is not, the vehicle may have a leak at the radiator hoses, heater hoses, radiator, water pump, or somewhere else in the cooling system.

⚠ Warning

Heater and radiator hoses, and other engine parts, can be very hot. Do not touch them. If you do, you can be burned.

Do not run the engine if there is a leak. If you run the engine, it could lose all coolant. That could cause an engine fire, and you could be burned. Get any leak fixed before you drive the vehicle.

If there seems to be no leak, with the engine on, check to see if the electric engine cooling fans are running. If the engine is overheating, the fans should be running. If it is not, the vehicle needs service. Turn off the engine.

⚠ Caution

Using coolant other than DEX-COOL® can cause premature engine, heater core, or radiator corrosion. In addition, the engine coolant could require changing sooner. Any repairs would not be covered by the vehicle warranty. Always use DEX-COOL (silicate-free) coolant in the vehicle.

Cooling System (Intercooler)

Intercooler ZL1 Only

The 6.2L LSA supercharged V8 engine has an intercooler cooling system.

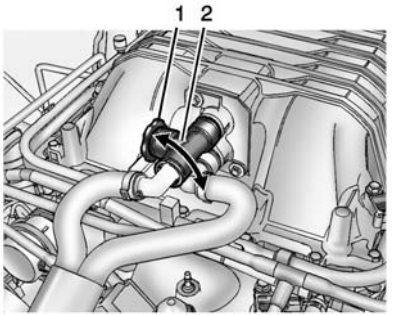

1. Intercooler Fill Cap
2. Intercooler Fill Neck

1. Open the hood and remove the engine cover. See *Engine Cover on page 10-13*.
2. Turn the intercooler fill neck (2) to the vertical position.
3. Remove the intercooler fill cap (1).
4. Check to see if coolant is visible near the top of the opening.
5. If coolant is not visible, see dealer for service.

6. Reverse Steps 1–3 to install intercooler fill cap and turn the intercooler fill neck.

The intercooler cooling system has a special procedure for draining and adding coolant. Because this procedure is difficult, see the dealer for service if the intercooler is low on coolant. The procedure can also be found in the service manual. To purchase a service manual, see *Service Publications Ordering Information on page 13-11*.

Cooling System (Z/28 Engine Only)

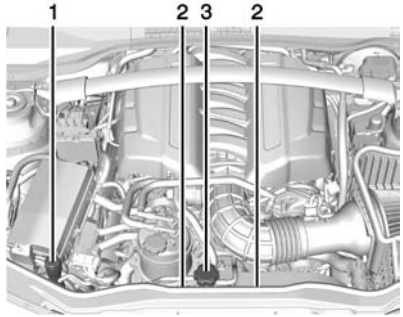

7.0L V8 Engine

1. Engine Coolant Recovery Bottle
2. Electric Cooling Fans (Out of View)
3. Radiator Cap

⚠ Warning

An electric engine cooling fan under the hood can start up even when the engine is not running and can cause injury. Keep hands, clothing, and tools away from any underhood electric fan.

If the coolant inside the engine coolant recovery bottle is boiling, do not do anything else until it cools down. The vehicle should be parked on a level surface.

The coolant level should be between the MIN and MAX lines. If it is not, the vehicle may have a leak at the radiator hoses, heater hoses, radiator, water pump, or somewhere else in the cooling system.

⚠ Warning

Heater and radiator hoses, and other engine parts, can be very hot. Do not touch them. If you do, you can be burned.

Do not run the engine if there is a leak. If you run the engine, it could lose all coolant. That could cause an engine fire, and you could be burned. Get any leak fixed before you drive the vehicle.

If there seems to be no leak, with the engine on, check to see if the electric engine cooling fans are running. If the engine is overheating, the fans should be running. If it is not, the vehicle needs service. Turn off the engine.

⚠ Caution

Using coolant other than DEX-COOL® can cause premature engine, heater core, or radiator corrosion. In addition, the engine coolant could require changing sooner. Any repairs would not be covered by the vehicle warranty. Always use DEX-COOL (silicate-free) coolant in the vehicle.

Engine Coolant

The cooling system in the vehicle is filled with DEX-COOL® engine coolant. This coolant is designed to remain in the vehicle for 5 years or 240 000 km (150,000 mi), whichever occurs first.

The following explains the cooling system and how to check and add coolant when it is low. If there is a problem with engine overheating, see *Engine Overheating on page 10-35*.

What to Use

⚠ Warning

Adding only plain water or some other liquid to the cooling system can be dangerous. Plain water and other liquids, can boil before the proper coolant mixture will. The coolant warning system is set for the proper coolant mixture. With plain water or the wrong mixture, the engine could get too hot but you would not get the overheat warning. The engine could catch fire and you or others could be burned. Use a 50/50 mixture of clean, drinkable water and DEX-COOL coolant.

Use a 50/50 mixture of clean, drinkable water and DEX-COOL coolant. If using this mixture, nothing else needs to be added. This mixture:

- Gives freezing protection down to −37°C (−34°F), outside temperature.
- Gives boiling protection up to 129°C (265°F), engine temperature.
- Protects against rust and corrosion.
- Will not damage aluminum parts.
- Helps keep the proper engine temperature.

⚠ Caution

If improper coolant mixture, inhibitors, or additives are used in the vehicle cooling system, the engine could overheat and be damaged. Too much water in the

(Continued)

Caution (Continued)

mixture can freeze and crack engine cooling parts. The repairs would not be covered by the vehicle warranty. Use only the proper mixture of engine coolant for the cooling system. See *Recommended Fluids and Lubricants on page 11-12*.

Never dispose of engine coolant by putting it in the trash, pouring it on the ground, or into sewers, streams, or bodies of water. Have the coolant changed by an authorized service center, familiar with legal requirements regarding used coolant disposal. This will help protect the environment and your health.

Checking Coolant

The vehicle must be on a level surface when checking the coolant level.

Check coolant as follows:

1. Turn the ignition off.
2. Locate the engine coolant recovery bottle. See *Engine Compartment Overview on page 10-6*.

3. Turn the coolant dipstick cap counterclockwise and slowly pull out the dipstick.

4. There are maximum and minimum markings on the dipstick. When the engine is cold, the coolant level should be at or above the MIN mark on the dipstick. After the vehicle has been driven and the engine is at normal operating temperature, the level should be somewhere between half full and the maximum mark.
5. If the coolant level is correct, replace the dipstick and turn the cap clockwise to secure.

How to Add Coolant to the Coolant Recovery Bottle

⚠ Warning

You can be burned if you spill coolant on hot engine parts. Coolant contains ethylene glycol and it will burn if the engine parts are hot enough. Do not spill coolant on a hot engine.

⚠ Caution

This vehicle has a specific coolant fill procedure. Failure to follow this procedure could cause the engine to overheat and be severely damaged.

Add coolant as follows:

1. Turn the engine coolant recovery bottle dipstick cap counterclockwise and slowly pull out the dipstick.
2. Pour the coolant into the engine coolant recovery bottle.
3. When the level is correct, replace the dipstick and turn the cap clockwise to secure.

How to Add Coolant to the Radiator

⚠ Warning

You can be burned if you spill coolant on hot engine parts. Coolant contains ethylene glycol and it will burn if the engine parts are hot enough. Do not spill coolant on a hot engine.

⚠ Caution

This vehicle has a specific coolant fill procedure. Failure to follow this procedure could cause the engine to overheat and be severely damaged.

⚠ Warning

An electric engine cooling fan under the hood can start up even when the engine is not running and can cause injury. Keep hands, clothing, and tools away from any underhood electric fan.

⚠ Warning

Steam and scalding liquids from a hot cooling system can blow out and burn you badly. They are under pressure, and if you turn the surge tank pressure cap — even a little — they can come out at high speed. Never turn the cap when the cooling system, including the surge tank pressure cap, is hot. Wait for the cooling system and surge tank pressure cap to cool if you ever have to turn the pressure cap.

If coolant is needed, add the proper mixture directly to the radiator, but be sure the cooling system is cool before this is done.

If no coolant is visible in the engine coolant recovery bottle, add coolant as follows:

3.6L V6 Engine Fill Procedure

1. Locate the radiator cap. See *Engine Compartment Overview on page 10-6*.
2. Remove the engine cover to access the radiator cap. See *Engine Cover on page 10-13*.

3. Cover the radiator cap with a thick cloth and turn it slowly counterclockwise and remove.
4. If there is no coolant visible or the level is low, slowly fill the system through the radiator cap opening with a 50/50 mixture of DEX-COOL and clean drinkable water.

   Wait 30 seconds for coolant to settle and continue filling if the level drops.

   Do not spill coolant on the accessory drive belts.

   If a spill occurs, rinse the belt with fresh water.
5. Start the engine.
6. With the engine idling, continue to add coolant through the radiator cap opening until full.

   Wait 30 seconds for the coolant to settle and top off, if the level drops.
7. Once the system is full, put the radiator cap back on by turning clockwise.

8. With the engine still running, raise the engine to 2500 rpm for 30–40 seconds.
9. Turn the engine off.
10. Repeat Steps 2–7 then turn the engine off.
11. Allow engine to cool for 45 minutes. Top off coolant through the radiator cap opening and reinstall the radiator cap.
12. Reinstall the engine cover. See *Engine Cover on page 10-13*.

13. Check the coolant level in the engine coolant recovery bottle and fill it until the level is at the top symbol on the dipstick.

6.2L V8 and 7.0L V8 Engine Fill Procedure

1. Locate the radiator cap. See *Engine Compartment Overview on page 10-6*.

2. Cover the radiator cap with a thick cloth and turn it slowly counterclockwise and remove.
3. If there is no coolant visible or the level is low, slowly fill the system through the radiator cap opening with a 50/50 mixture of clean, drinkable water and DEX-COOL coolant until full.

   Wait 30 seconds for coolant to settle and top off if the level drops.

   Do not spill coolant on the accessory drive belts.

   If a spill occurs, rinse the belt with fresh water.
4. Start the engine.
5. With the engine idling, top off the coolant through the radiator cap opening until full.

   Wait 30 seconds for the coolant to settle and top off, if the level drops.
6. Once the system is full, put the radiator cap back on by turning clockwise.
7. Turn the engine off.

8. Check the coolant level in the engine coolant recovery bottle and fill it until the level is at the top mark on the dipstick.

⚠ Caution

If the pressure cap is not tightly installed, coolant loss and possible engine damage may occur. Be sure the cap is properly and tightly secured.

Engine Overheating

The vehicle has an indicator to warn of engine overheating.

There is an engine coolant temperature gauge on the vehicle instrument panel. See *Engine Coolant Temperature Gauge on page 5-12*.

If the decision is made not to lift the hood when this warning appears, but instead get service help right away. See *Roadside Assistance Program on page 13-5*.

If the decision is made to lift the hood, make sure the vehicle is parked on a level surface.

Then check to see if the engine cooling fans are running. If the engine is overheating, both fans should be running. If they are not, do not continue to run the engine and have the vehicle serviced.

⚠ Caution

Running the engine without coolant may cause damage or a fire. Vehicle damage would not be covered by the vehicle warranty.

If Steam Is Coming from the Engine Compartment

⚠ Warning

Steam from an overheated engine can burn you badly, even if you just open the hood. Stay away from the engine if you see or hear steam coming from it. Just turn it off and get everyone away from the vehicle until it cools down. Wait until there is no sign of steam or coolant before you open the hood.

(Continued)

Warning (Continued)

If you keep driving when the engine is overheated, the liquids in it can catch fire. You or others could be badly burned. Stop the engine if it overheats, and get out of the vehicle until the engine is cool.

If No Steam Is Coming from the Engine Compartment

If an engine overheat warning is displayed but no steam can be seen or heard, the problem may not be too serious. Sometimes the engine can get a little too hot when the vehicle:

- Climbs a long hill on a hot day.
- Stops after high-speed driving.
- Idles for long periods in traffic.
- Tows a trailer.

If the overheat warning is displayed with no sign of steam:

1. Turn the air conditioning off.
2. Turn the heater on to the highest temperature and to the highest fan speed. Open the windows as necessary.
3. When it is safe to do so, pull off the road, shift to P (Park) or N (Neutral) and let the engine idle.

If the temperature overheat gauge is no longer in the overheat zone or an overheat warning no longer displays, the vehicle can be driven. Continue to drive the vehicle slowly for about 10 minutes. Keep a safe vehicle distance from the vehicle in front. If the warning does not come back on, continue to drive normally and have the cooling system checked for proper fill and function.

If the warning continues, pull over, stop, and park the vehicle right away.

If there is no sign of steam, idle the engine for three minutes while parked. If the warning is still displayed, turn off the engine until it cools down.

Power Steering Fluid (L99, LS3, ZL1 and Z/28)

The vehicle has electric power steering and does not use power steering fluid.

Power Steering Fluid (LFX)

The power steering fluid reservoir is under the engine cover on the driver side toward the front of the engine compartment. See *Engine Compartment Overview on page 10-6*.

When to Check Power Steering Fluid

It is not necessary to regularly check power steering fluid unless you suspect there is a leak in the system or an unusual noise is heard. A fluid loss in this system could indicate a problem. Have the system inspected and repaired.

How to Check Power Steering Fluid

Check the level after the vehicle has been driven for at least 20 minutes so the fluid is warm.

To check the power steering fluid:

1. Turn the ignition key to LOCK/OFF and let the engine compartment cool down.
2. Remove the engine cover. See *Engine Cover on page 10-13*.
3. Wipe the cap and the top of the reservoir clean.
4. Turn the cap counterclockwise and pull it straight up.
5. Wipe the dipstick with a clean rag.
6. Replace the cap and completely tighten it.
7. Remove the cap again and look at the fluid level on the dipstick.

When the engine is hot, the level should be at the hot MAX level. When the engine is cold, the fluid level should be between MIN and MAX on the dipstick.

What to Use

To determine what kind of fluid to use, see *Recommended Fluids and Lubricants on page 11-12*. Always use the proper fluid.

Washer Fluid

What to Use

When windshield washer fluid is needed, be sure to read the manufacturer's instructions before use. If operating the vehicle in an area where the temperature can fall below freezing, use a fluid that has sufficient protection against freezing.

Adding Washer Fluid

Open the cap with the washer symbol on it. Add washer fluid until the reservoir is full. See *Engine Compartment Overview on page 10-6* for reservoir location.

⚠ Caution

- Do not use engine coolant (antifreeze) in the windshield washer. It can damage the windshield washer system and paint.
- Do not mix water with ready-to-use washer fluid. Water can cause the solution to freeze and damage the washer fluid tank and other parts of the washer system.
- When using concentrated washer fluid, follow the manufacturer instructions for adding water.
- Fill the washer fluid tank only three-quarters full when it is very cold. This allows for fluid expansion if freezing occurs, which could damage the tank if it is completely full.

Brakes

This vehicle has disc brakes. Disc brake pads have built-in wear indicators that make a high-pitched warning sound when the brake pads are worn and new pads are needed. The sound can come and go or be heard all the time when the vehicle is moving, except when applying the brake pedal firmly.

⚠ Warning

The brake wear warning sound means that soon the brakes will not work well. That could lead to a crash. When the brake wear warning sound is heard, have the vehicle serviced.

⚠ Caution

Continuing to drive with worn-out brake pads could result in costly brake repair.

Some driving conditions or climates can cause a brake squeal when the brakes are first applied or lightly applied. This does not mean something is wrong with the brakes.

Properly torqued wheel nuts are necessary to help prevent brake pulsation. When tires are rotated, inspect brake pads for wear and evenly tighten wheel nuts in the proper sequence to torque specifications. See *Capacities and Specifications on page 12-2*.

Brake pads should be replaced as complete sets.

Brake Pedal Travel

See your dealer if the brake pedal does not return to normal height, or if there is a rapid increase in pedal travel. This could be a sign that brake service might be required.

Brake Adjustment

Every time the brakes are applied, with or without the vehicle moving, the brakes adjust for wear.

Replacing Brake System Parts

The braking system on a vehicle is complex. Its many parts have to be of top quality and work well together if the vehicle is to have really good braking. The vehicle was designed and tested with top-quality brake parts. When parts of the braking system are replaced, be sure to get new, approved replacement parts. If this is not done, the brakes may not work properly. For example, installing disc brake pads that are wrong for the vehicle, can change the balance between the front and rear brakes — for the worse. The braking performance expected can change in many other ways if the wrong replacement brake parts are installed.

Z/28 Brake Pad and Rotor Wear

The Z/28 has electronic brake pad wear sensors. When the pads are worn, a message displays in the Driver Information Center. See *Brake System Messages on page 5-33*.

Visual Inspection

Periodic visual inspection of the brake pads is required to determine when to replace the brake pads.

- Brake pads can be visually inspected through the wheel by inspecting the outer brake pads at each wheel.
- Brake pads should be replaced when the pad lining is worn to 2 mm of pad thickness. New pads are 10 mm thick.
- In addition, brake pad inspection is required any time the tires are removed.

The Z/28 has ceramic brake rotors. Rotors should be visually inspected when the brake pads are replaced. The rotor can be reused if it is within specification. Rotor inspection and measuring methods can be found in the service manual. See *Service Publications Ordering Information on page 13-11*.

Brake Fluid

The brake/clutch master cylinder reservoir is filled with DOT 3 brake fluid as indicated on the reservoir cap. See *Engine Compartment Overview on page 10-6* for the location of the reservoir.

There are only two reasons why the fluid level in the reservoir might go down:

- The fluid level goes down because of normal brake lining wear. When new linings are installed, the fluid level goes back up.

- A fluid leak in the brake/clutch hydraulic system can also cause a low fluid level. Have the brake/clutch hydraulic system fixed, since a leak means that sooner or later the brakes and/or clutch will not work well.

Do not top off the brake/clutch fluid. Adding fluid does not correct a leak. If fluid is added when the linings are worn, there will be too much fluid when new brake linings are installed. Add or remove brake fluid, as necessary, only when work is done on the brake/clutch hydraulic system.

⚠ Warning

If too much brake fluid is added, it can spill on the engine and burn, if the engine is hot enough. You or others could be burned, and the vehicle could be damaged. Add brake fluid only when work is done on the brake/clutch hydraulic system.

When the brake/clutch fluid falls to a low level, the brake warning light comes on. See *Brake System Warning Light on page 5-19*.

What to Add

Use only new DOT 3 brake fluid from a sealed container. See *Recommended Fluids and Lubricants on page 11-12*.

Always clean the brake/clutch fluid reservoir cap and the area around the cap before removing it. This helps keep dirt from entering the reservoir.

⚠ Warning

With the wrong kind of fluid in the brake/clutch hydraulic system, the brakes might not work well. This could cause a crash. Always use the proper brake/clutch fluid.

⚠ Caution

- Using the wrong fluid can badly damage brake/clutch hydraulic system parts. For example, just a few drops of mineral-based oil, such as engine oil, in the brake hydraulic system can damage brake hydraulic system parts so badly that they will have to be replaced. Do not let someone put in the wrong kind of fluid.
- If brake fluid is spilled on the vehicle's painted surfaces, the paint finish can be damaged. Be careful not to spill brake fluid on the vehicle. If you do, wash it off immediately.

Battery

The battery is in the trunk, under the floor panel. Refer to the replacement number shown on the original battery label when a new battery is needed.

⚠ Warning

Battery posts, terminals, and related accessories contain lead and lead compounds, chemicals known to the State of California to cause cancer and reproductive harm. Wash hands after handling.

Vehicle Storage

⚠ Warning

Batteries have acid that can burn you and gas that can explode. You can be badly hurt if you are not careful. See *Jump Starting on*

(Continued)

Warning (Continued)

page 10-96 for tips on working around a battery without getting hurt.

Infrequent Usage: Remove the black, negative (−) cable from the battery to keep the battery from running down.

Extended Storage: Remove the black, negative (−) cable from the battery or use a battery trickle charger.

Rear Axle

When to Check Lubricant

It is not necessary to regularly check the rear axle fluid, unless a leak is suspected or an unusual noise is heard. A fluid loss could indicate a problem. Have it inspected and repaired by your dealer.

Starter Switch Check

⚠ Warning

When you are doing this inspection, the vehicle could move suddenly. If the vehicle moves, you or others could be injured.

1. Before starting this check, be sure there is enough room around the vehicle.
2. Apply both the parking brake and the regular brake.

   Do not use the accelerator pedal, and be ready to turn off the engine immediately if it starts.

3. For automatic transmission vehicles, try to start the engine in each gear. The vehicle should start only in P (Park) or N (Neutral). If the vehicle starts in any other position, contact your dealer for service.

   For manual transmission vehicles, put the shift lever in Neutral, push the clutch pedal down halfway, and try to start the engine. The vehicle should start only when the clutch pedal is pushed down all the way to the floor. If the vehicle starts when the clutch pedal is not pushed all the way down, contact your dealer for service.

Automatic Transmission Shift Lock Control Function Check

⚠ Warning

When you are doing this inspection, the vehicle could move suddenly. If the vehicle moves, you or others could be injured.

1. Before starting this check, be sure there is enough room around the vehicle. It should be parked on a level surface.
2. Apply the parking brake. Be ready to apply the regular brake immediately if the vehicle begins to move.
3. With the engine off, turn the ignition on, but do not start the engine. Without applying the regular brake, try to move the shift lever out of P (Park) with normal effort. If the shift lever moves out of P (Park), contact your dealer for service.

Ignition Transmission Lock Check

While parked and with the parking brake set, try to turn the ignition to LOCK/OFF in each shift lever position.

- The ignition should turn to LOCK/OFF only when the shift lever is in P (Park).
- The ignition key should come out only in LOCK/OFF.

Contact your dealer if service is required.

Park Brake and P (Park) Mechanism Check

⚠ Warning

When you are doing this check, the vehicle could begin to move. You or others could be injured and property could be damaged. Make sure there is room in front of the vehicle in case it begins to roll. Be ready to apply the regular brake at once should the vehicle begin to move.

Park on a fairly steep hill, with the vehicle facing downhill. Keeping your foot on the regular brake, set the parking brake.

- To check the parking brake's holding ability: With the engine running and the transmission in N (Neutral), slowly remove foot pressure from the regular brake pedal. Do this until the vehicle is held by the parking brake only.
- To check the P (Park) mechanism's holding ability: With the engine running, shift to P (Park). Then release the parking brake followed by the regular brake.

Contact your dealer if service is required.

Wiper Blade Replacement

Windshield wiper blades should be inspected for wear and cracking. See *Maintenance Schedule on page 11-2* for more information.

Replacement blades come in different types and are removed in different ways. For proper type and length, see *Maintenance Replacement Parts on page 11-14*.

To replace the windshield wiper blade:

1. Pull the windshield wiper assembly away from the windshield.

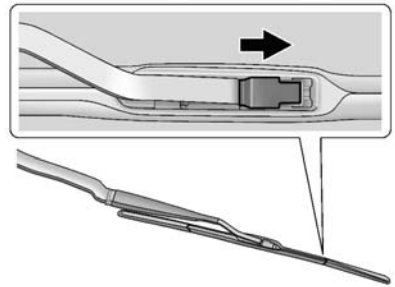

2. Lift up on the latch in the middle of the wiper blade where the wiper arm attaches.
3. With the latch open, pull the wiper blade down toward the windshield far enough to release it from the J-hooked end of the wiper arm.

4. Remove the wiper blade.

   Allowing the wiper blade arm to touch the windshield when no wiper blade is installed could damage the windshield. Any damage that occurs would not be covered by the vehicle warranty. Do not allow the wiper blade arm to touch the windshield.

5. Reverse Steps 1–3 for wiper blade replacement.

Windshield Replacement

If the Head-Up display (HUD) system and the windshield need to be replaced, get one that is designed for HUD or the HUD image may look out of focus.

Headlamp Aiming

Headlamp aim has been preset and should need no further adjustment.

If the vehicle is damaged in a crash, the headlamp aim may be affected. If adjustment to the headlamps is necessary, see your dealer.

Bulb Replacement

For the proper type of replacement bulbs, see *Replacement Bulbs on page 10-48*.

For any bulb-changing procedure not listed in this section, contact your dealer.

Halogen Bulbs

⚠ Warning

Halogen bulbs have pressurized gas inside and can burst if you drop or scratch the bulb. You or others could be injured. Be sure to read and follow the instructions on the bulb package.

High Intensity Discharge (HID) Lighting

⚠ Warning

The high intensity discharge lighting system operates at a very high voltage. If you try to service any of the system components, you could be seriously injured. Have your dealer or a qualified technician service them.

After an HID headlamp bulb has been replaced, the beam might be a slightly different shade than it was originally. This is normal.

Headlamps, Front Turn Signal and Parking Lamps (Uplevel Vehicle)

The uplevel model vehicle has an HID headlamp and a turn signal lamp on the headlamp assembly. The parking lamp is also the function of the HID headlamp. See *High Intensity Discharge (HID) Lighting on page 10-45*.

To replace the turn signal bulb:

1. Open the hood. See *Hood on page 10-5*.

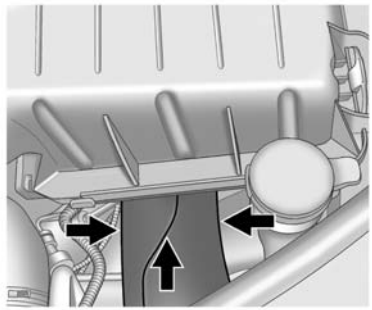

2. Press in on the tabs on the sides of the duct, and then push the duct rearward into the air cleaner/filter housing.

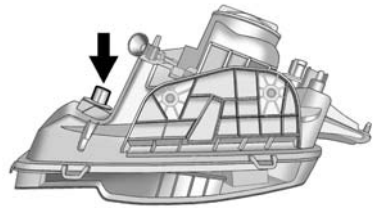

3. Disconnect the wiring harness and turn the bulb socket counterclockwise to remove it from the headlamp assembly.
4. Pull the bulb straight out from the socket.
5. Push the new bulb into the socket and reinstall the socket into the headlamp assembly by turning it clockwise.
6. Reconnect the electrical connector.

7. Pull the duct back out of the air cleaner/filter housing until the tabs snap the duct back into position.

Headlamps, Front Turn Signal and Parking Lamps (Base Vehicle)

The base model vehicle has a halogen headlamp and a turn signal/parking lamp on the headlamp assembly.

To replace one of these bulbs:

1. Open the hood. See *Hood on page 10-5*.

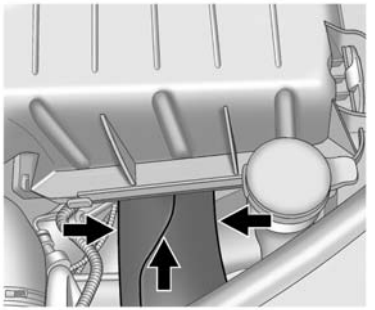

2. Press in on the tabs on the sides of the duct, and then push the duct rearward into the air cleaner/filter housing.
3. Disconnect the wiring harness and turn the bulb socket counterclockwise to remove it from the headlamp assembly.
4. Pull the bulb straight out from the socket.
5. Push the new bulb into the socket and reinstall the socket into the headlamp assembly by turning it clockwise.
6. Reconnect the electrical connector.
7. Pull the duct back out of the air cleaner/filter housing until the tabs snap the duct back into position.

Taillamps, Turn Signal, and Stoplamps

To replace a taillamp, turn signal, or stoplamp bulb:

1. Open the trunk. See *Trunk on page 2-9*.

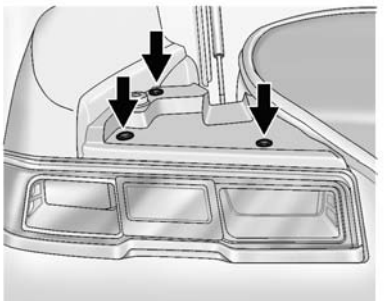

2. Remove the close out panel retainers to gain access to the bulb socket connectors.
3. Turn the bulb socket counterclockwise to remove it.
4. Pull the old bulb straight out of the bulb socket.
5. Push the new bulb straight into the bulb socket until it clicks.
6. Turn the bulb socket clockwise to reinstall.

License Plate Lamp

To replace one of these bulbs:

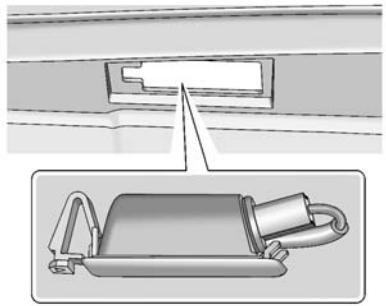

1. Unclip the license plate lamp from the fascia opening.
2. Pull the license plate lamp down through the fascia opening.
3. Turn the bulb socket counterclockwise and pull the bulb straight out of the lamp socket.
4. Install the new bulb.
5. Push the bulb straight into the socket and turn clockwise to reinstall.
6. Reinstall the license plate lamp by lifting it through the fascia opening until the clip is in place.

Replacement Bulbs

Exterior Lamp	Bulb Number
Front Parking and Turn Signal Lamp (Except ZL1)	T20
Front Park and Turn Signal Lamp (ZL1)	3457NAK
Low-Beam Headlamp	H11LL
High-Beam Headlamp	H9LL
License Plate Lamp	W5WLL
Rear Stoplamps	T20
Rear Taillamp	7444LL
Rear Turn Signal Lamp	W21/5W

For replacement bulbs not listed here, contact your dealer.

Electrical System

Electrical System Overload

The vehicle has fuses and circuit breakers to protect against an electrical system overload.

When the current electrical load is too heavy, the circuit breaker opens and closes, protecting the circuit until the current load returns to normal or the problem is fixed. This greatly reduces the chance of circuit overload and fire caused by electrical problems.

Fuses and circuit breakers protect power devices in the vehicle.

Replace a bad fuse with a new one of the identical size and rating.

If there is a problem on the road and a fuse needs to be replaced, the same amperage fuse can be borrowed. Choose some feature of the vehicle that is not needed to use and replace it as soon as possible.

Headlamp Wiring

An electrical overload may cause the lamps to go on and off, or in some cases to remain off. Have the headlamp wiring checked right away if the lamps go on and off or remain off.

Windshield Wipers

If the wiper motor overheats due to heavy snow or ice, the windshield wipers will stop until the motor cools and will then restart.

Although the circuit is protected from electrical overload, overload due to heavy snow or ice may cause wiper linkage damage. Always clear ice and heavy snow from the windshield before using the windshield wipers.

If the overload is caused by an electrical problem and not snow or ice, be sure to get it fixed.

Fuses and Circuit Breakers

The wiring circuits in the vehicle are protected from short circuits by a combination of fuses and circuit breakers. This greatly reduces the chance of damage caused by electrical problems.

To check a fuse, look at the silver-colored band inside the fuse. If the band is broken or melted, replace the fuse. Be sure to replace a bad fuse with a new one of the identical size and rating.

Fuses of the same amperage can be temporarily borrowed from another fuse location, if a fuse goes out. Replace the fuse as soon as possible.

To identify and check fuses, circuit breakers, and relays, see *Engine Compartment Fuse Block on page 10-49*, *Instrument Panel Fuse Block on page 10-52*, and *Rear Compartment Fuse Block on page 10-54*.

Engine Compartment Fuse Block

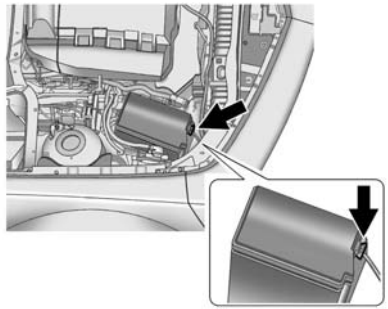

To remove the hinged fuse block cover, press the clip at the front of the cover, and swing it up.

⚠ Caution

Spilling liquid on any electrical component on the vehicle may damage it. Always keep the covers on any electrical component.

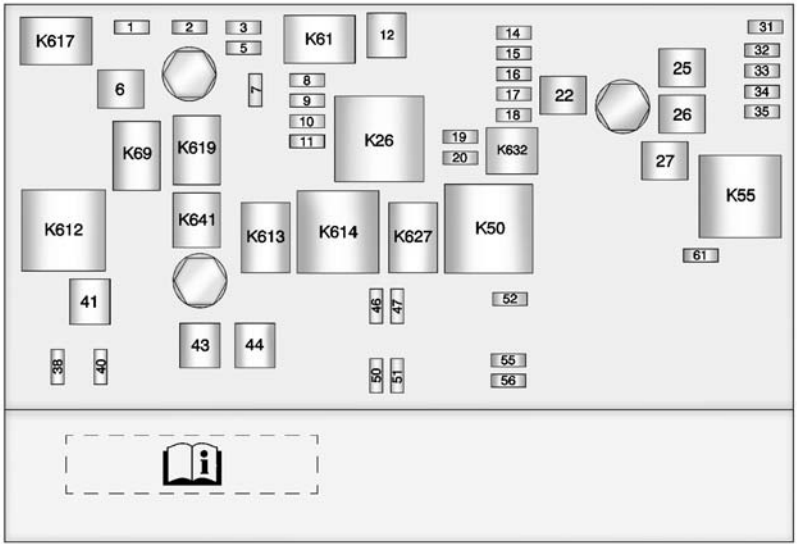

The vehicle may not be equipped with all of the fuses, relays, and features shown.

J-Case Fuses	Usage
6	Wiper
12	Starter
22	Brake Vacuum Pump
25	Power Windows Rear
26	Power Windows Front
27	Rear Defog
41	Cooling Fan High
43	Antilock Brake System Pump
44	Cooling Fan Low

Mini Fuses	Usage
1	Air Conditioning Compressor Clutch

Mini Fuses	Usage
2	Transmission Control Module
3	Intercooler Pump
5	Engine Control Module Main
7	Pre-Catalytic Converter Oxygen Sensor
8	Post-Catalytic Converter Oxygen Sensor
9	Fuel Injectors – Even
10	Fuel Injectors – Odd
11	Cooling Fan Relay
14	Manifold Air Flow/ Chassis Control
15	Ignition
16	Run/Crank IP
17	Sensing Diagnostic Module/Ignition

Mini Fuses	Usage
18	Run/Crank Body
19	Transmission Control Module/ Ignition
20	Engine Control Module/Ignition
31	Outside Rearview Mirror
32	Canister Vent Solenoid
33	Body Control Module 6
34	Sunroof
35	Front Heated Seats
38	Washer Pump Front
40	Antilock Brake System Valves
46	HID Headlamp – Left Front
47	HID Headlamp – Right Front

Mini Fuses	Usage
50	Fog Lamps
51	Horn
52	Spare
55	High-Beam Headlamp – Right Front
56	High-Beam Headlamp – Left Front
61	Heated Mirror

Mini Relays	Usage
K26	Powertrain
K50	Run/Crank
K55	Rear Defog
K612	Cooling Fan High
K614	Cooling Fan Control

Micro Relays	Usage
K61	Starter
K69	Wiper Control
K613	Cooling Fan Low
K617	Air Conditioning Compressor Clutch
K619	Wiper Speed
K627	High Intensity Discharge Headlamps
K632	Brake Vacuum Pump
K641	Intercooler Pump

Instrument Panel Fuse Block

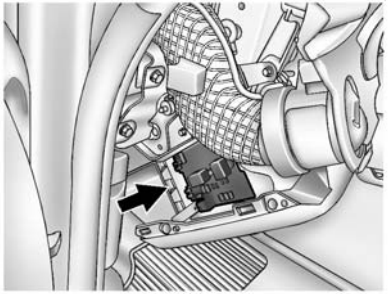

The instrument panel fuse block is on the end of the instrument panel, on the driver side of the vehicle. To access the fuses, open the fuse panel door by pulling out.

To reinstall the door, push the door back into its original location.

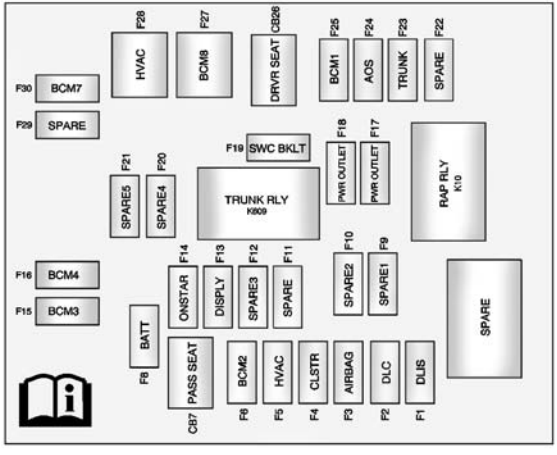

The vehicle may not be equipped with all of the fuses, relays, and features shown.

Fuses	Usage
F1	Discrete Logic Ignition Switch
F2	Diagnostic Link Connector
F3	Airbag
F4	Cluster
F5	Heating Ventilation Air Conditioning Controller
F6	Body Control Module 2
F8	Battery
F9	Spare
F10	Spare
F11	Spare
F12	Spare
F13	Display
F14	OnStar® Universal Hands-Free Phone (If Equipped)
F15	Body Control Module 3
F16	Body Control Module 4
F17	Power Outlet 1
F18	Power Outlet 2
F19	Steering Wheel Controls Backlight
F20	Spare

Fuses	Usage
F21	Spare
F22	Spare
F23	Trunk
F24	Automatic Occupant Sensing
F25	Body Control Module 1
F27	Body Control Module 8
F28	Front Heater, Ventilation, and Air Conditioning
F29	Spare
F30	Body Control Module 7

Circuit Breakers	Usage
CB7	Passenger Seat
CB26	Driver Seat

Relays	Usage
K10	Retained Accessory Power
K609	Trunk
SPARE	SPARE

Rear Compartment Fuse Block

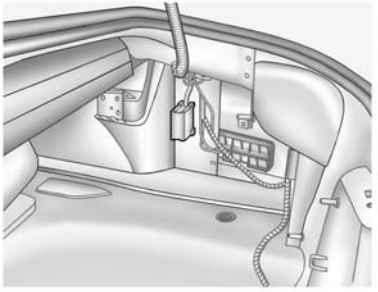

The rear compartment fuse block is on the right side of the trunk behind a cover. Remove the convenience net retainers, the rear sill plate, and the passenger side trim retainers, then swing the trim out of the way.

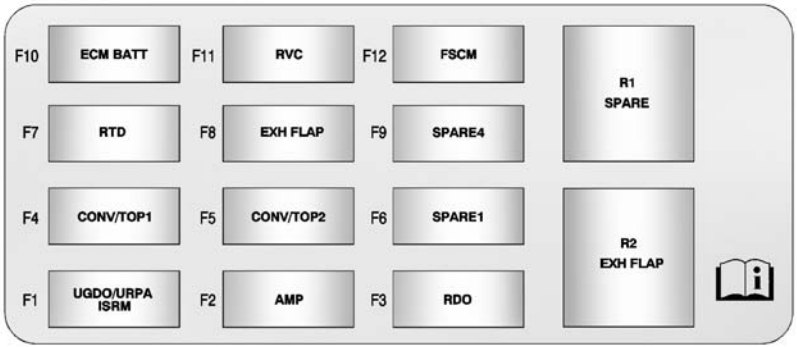

The vehicle may not be equipped with all of the fuses, relays, and features shown.

Fuses	Usage
F1	Universal Remote System/Rear Parking Assist/ Inside Rearview Mirror

Fuses	Usage
F2	Amplifier
F3	Radio
F4	Convertible Top 1
F5	Convertible Top 2
F6	Spare 1

Fuses	Usage
F7	Real Time Damping
F8	Active Exhaust Flapper
F9	Spare 4
F10	Engine Control Module/Battery
F11	Regulated Voltage Control
F12	Fuel System Control Module

Relays	Usage
R1	Spare
R2	Active Exhaust Flapper

Wheels and Tires

Tires

Every new GM vehicle has high-quality tires made by a leading tire manufacturer. See the warranty manual for information regarding the tire warranty and where to get service. For additional information refer to the tire manufacturer.

⚠ Warning

- Poorly maintained and improperly used tires are dangerous.
- Overloading the tires can cause overheating as a result of too much flexing. There could be a blowout

(Continued)

Warning (Continued)

and a serious crash. See *Vehicle Load Limits on page 9-14*.

- Underinflated tires pose the same danger as overloaded tires. The resulting crash could cause serious injury. Check all tires frequently to maintain the recommended pressure. Tire pressure should be checked when the tires are cold.
- Overinflated tires are more likely to be cut, punctured, or broken by a sudden impact — such as when hitting a pothole. Keep tires at the recommended pressure.

(Continued)

Warning (Continued)

- Worn or old tires can cause a crash. If the tread is badly worn, replace them.
- Replace any tires that have been damaged by impacts with potholes, curbs, etc.
- Improperly repaired tires can cause a crash. Only the dealer or an authorized tire service center should repair, replace, dismount, and mount the tires.
- Do not spin the tires in excess of 56 km/h (35 mph) on slippery surfaces such as snow, mud, ice, etc. Excessive spinning may cause the tires to explode.

All-Season Tires

This vehicle may come with all-season tires. These tires are designed to provide good overall performance on most road surfaces and weather conditions. Original equipment tires designed to GM's specific tire performance criteria have a TPC specification code molded onto the sidewall. Original equipment all-season tires can be identified by the last two characters of this TPC code, which will be “MS.”

Consider installing winter tires on the vehicle if frequent driving on snow or ice-covered roads is expected. All-season tires provide adequate performance for most winter driving conditions, but they may not offer the same level of traction or performance as winter tires on snow or ice-covered roads. See *Winter Tires on page 10-57*.

Winter Tires

This vehicle was not originally equipped with winter tires. Winter tires are designed for increased traction on snow and ice-covered roads. Consider installing winter tires on the vehicle if frequent driving on ice or snow covered roads is expected. See your dealer for details regarding winter tire availability and proper tire selection. Also, see *Buying New Tires on page 10-74*.

With winter tires, there may be decreased dry road traction, increased road noise, and shorter tread life. After changing to winter tires, be alert for changes in vehicle handling and braking.

If using winter tires:

- Use tires of the same brand and tread type on all four wheel positions.
- Use only radial ply tires of the same size, load range, and speed rating as the original equipment tires.

Winter tires with the same speed rating as the original equipment tires may not be available for H, V, W, Y, and ZR speed rated tires. If winter tires with a lower speed rating are chosen, never exceed the tire's maximum speed capability.

Low-Profile Tires

If the vehicle has 305/30ZR19 size tires, they are classified as low-profile tires.

⚠ Caution

Low-profile tires are more susceptible to damage from road hazards or curb impact than standard profile tires. Tire and/or wheel assembly damage can occur when coming into contact

(Continued)

Caution (Continued)

with road hazards like potholes, or sharp edged objects, or when sliding into a curb. The warranty does not cover this type of damage. Keep tires set to the correct inflation pressure and when possible, avoid contact with curbs, potholes, and other road hazards.

Competition Oriented Tires

This vehicle may come with 305/30ZR19 competition oriented tires that are DOT approved for street use. Competition oriented tires use a special tread pattern and compound that provide more grip than normal road tires. The minimum tread depth will be reached earlier than typical tires, resulting in reduced tire life. This special tread pattern and compound will have decreased performance in cold climates, heavy rain, and standing water. We recommend installing winter tires on the vehicle when driving at temperatures below approximately 10°C (50°F) or on ice or snow covered roads. See *Winter Tires on page 10-57*.

⚠ Warning

Driving on wet roads, in heavy rain, or through standing water with competition oriented tires may cause hydroplaning and loss of control. Use extreme caution and drive slowly on wet roads.

⚠ Warning

Driving with competition oriented tires on snow, ice, or cold road surfaces can cause loss of control or an accident. Competition oriented tires are summer season tires and are not intended to be

(Continued)

Warning (Continued)

driven on snow, ice, or road surfaces below 10°C (50°F). Do not drive a vehicle with competition oriented tires in these conditions.

⚠ Caution

Competition oriented tires have rubber compounds that lose flexibility and may develop surface cracks in the tread area at temperatures below -7°C (20°F). Always store competition oriented tires indoors and at temperatures above -7°C (20°F) when not in use. If the tires have been subjected to -7°C (20°F) or less, let them warm up in a heated space to at least 10°C (50°F) for 24 hours or more before being installed or driving a

(Continued)

Caution (Continued)

vehicle on which they are installed. Do not apply heat or blow heated air directly on the tires. Always inspect tires before use. See *Tire Inspection on page 10-71*.

Summer Tires

High Performance Summer Tires

This vehicle may come with 245/45ZR20 and 275/40ZR20, 245/40ZR21 and 275/35ZR21, or 285/35ZR20 and 305/35ZR20 high performance summer tires. These tires have a special tread and compound that are optimized for maximum dry and wet road performance. This special tread and compound will have decreased performance in cold climates, and on ice and snow. We recommend installing winter tires on the vehicle if frequent driving at temperatures below approximately 5°C (40°F) or on ice or snow covered roads is expected. See *Winter Tires on page 10-57*.

⚠ Caution

High performance summer tires have rubber compounds that lose flexibility and may develop surface cracks in the tread area at temperatures below -7°C (20°F). Always store high performance summer tires indoors and at temperatures above -7°C (20°F) when not in use. If the tires have been subjected to -7°C (20°F) or less, let them warm up in a heated space to at least 5°C (40°F) for 24 hours or more before being installed or driving a vehicle on which they are installed. Do not apply heat or blow heated air directly on the tires. Always inspect tires before use. See *Tire Inspection on page 10-71*.

Tire Sidewall Labeling

Useful information about a tire is molded into its sidewall. The examples show a typical passenger vehicle tire and a compact spare tire sidewall.

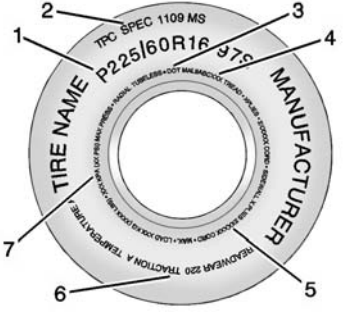

Passenger (P-Metric) Tire Example

(1) Tire Size: The tire size is a combination of letters and numbers used to define a particular tire's width, height, aspect ratio, construction type,

and service description. See the “Tire Size” illustration later in this section.

(2) TPC Spec (Tire Performance Criteria Specification): Original equipment tires designed to GM's specific tire performance criteria have a TPC specification code molded onto the sidewall. GM's TPC specifications meet or exceed all federal safety guidelines.

(3) DOT (Department of Transportation): The Department of Transportation (DOT) code indicates that the tire is in compliance with the U.S. Department of Transportation Motor Vehicle Safety Standards.

DOT Tire Date of Manufacture: The last four digits of the TIN indicate the tire manufactured date. The first two digits represent the week (01–52) and the last two digits, the year. For example, the third week of the year 2010 would have a four-digit DOT date of 0310.

(4) Tire Identification Number (TIN): The letters and numbers following the DOT (Department of Transportation) code are the Tire Identification Number (TIN). The TIN shows the manufacturer and plant code, tire size, and date the tire was manufactured. The TIN is molded onto both sides of the tire, although only one side may have the date of manufacture.

(5) Tire Ply Material: The type of cord and number of plies in the sidewall and under the tread.

(6) Uniform Tire Quality Grading (UTQG): Tire manufacturers are required to grade tires based on three performance factors: treadwear, traction, and temperature resistance. For more information see *Uniform Tire Quality Grading on page 10-76*.

(7) Maximum Cold Inflation Load Limit: Maximum load that can be carried and the maximum pressure needed to support that load.

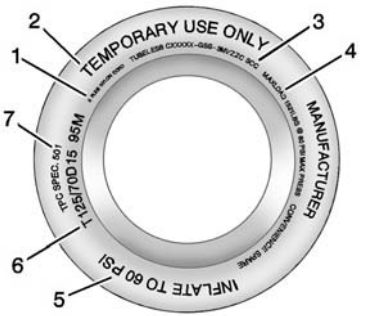

Compact Spare Tire Example

(1) Tire Ply Material: The type of cord and number of plies in the sidewall and under the tread.

(2) Temporary Use Only: The compact spare tire or temporary use tire should not be driven at speeds over 80 km/h (50 mph). The compact spare tire is for emergency use when a regular road tire has lost air and gone flat. If the vehicle has a compact spare tire, see *Compact Spare Tire on page 10-95* and *If a Tire Goes Flat on page 10-79*.

(3) Tire Identification Number (TIN): The letters and numbers following the DOT (Department of Transportation) code are the Tire Identification Number (TIN). The TIN shows the manufacturer and plant code, tire size, and date the tire was manufactured. The TIN is molded onto both sides of the tire, although only one side may have the date of manufacture.

(4) Maximum Cold Inflation Load Limit: Maximum load that can be carried and the maximum pressure needed to support that load.

(5) Tire Inflation: The temporary use tire or compact spare tire should be inflated to 420 kPa (60 psi). For more information on tire pressure and inflation see *Tire Pressure on page 10-65*.

(6) Tire Size: A combination of letters and numbers define a tire's width, height, aspect ratio, construction type, and service description. The letter T as the first character in the tire size means the tire is for temporary use only.

(7) TPC Spec (Tire Performance Criteria Specification): Original equipment tires designed to GM's specific tire performance criteria have a TPC specification code molded onto the sidewall. GM's TPC specifications meet or exceed all federal safety guidelines.

Tire Designations

Tire Size

The following is an example of a typical passenger vehicle tire size.

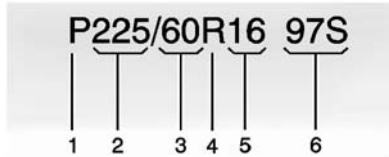

(1) Passenger (P-Metric) Tire: The United States version of a metric tire sizing system. The letter P as the first character in the tire size means a passenger

vehicle tire engineered to standards set by the U.S. Tire and Rim Association.

(2) Tire Width: The three-digit number indicates the tire section width in millimeters from sidewall to sidewall.

(3) Aspect Ratio: A two-digit number that indicates the tire height-to-width measurements. For example, if the tire size aspect ratio is 60, as shown in item 3 of the illustration, it would mean that the tire's sidewall is 60 percent as high as it is wide.

(4) Construction Code: A letter code is used to indicate the type of ply construction in the tire. The letter R means radial ply construction; the letter D means diagonal or bias ply construction; and the letter B means belted-bias ply construction.

(5) Rim Diameter: Diameter of the wheel in inches.

(6) Service Description: These characters represent the load index and speed rating of the tire. The load index represents the load carrying capacity a tire is certified to carry. The speed rating is the maximum speed a tire is certified to carry a load.

Tire Terminology and Definitions

Air Pressure: The amount of air inside the tire pressing outward on each square inch of the tire. Air pressure is expressed in kPa (kilopascal) or psi (pounds per square inch).

Accessory Weight: The combined weight of optional accessories. Some examples of optional accessories are automatic transmission, power windows, power seats, and air conditioning.

Aspect Ratio: The relationship of a tire's height to its width.

Belt: A rubber coated layer of cords between the plies and the tread. Cords may be made from steel or other reinforcing materials.

Bead: The tire bead contains steel wires wrapped by steel cords that hold the tire onto the rim.

Bias Ply Tire: A pneumatic tire in which the plies are laid at alternate angles less than 90 degrees to the centerline of the tread.

Cold Tire Pressure: The amount of air pressure in a tire, measured in kPa (kilopascal) or psi (pounds per square inch)

before a tire has built up heat from driving. See *Tire Pressure on page 10-65*.

Curb Weight: The weight of a motor vehicle with standard and optional equipment including the maximum capacity of fuel, oil, and coolant, but without passengers and cargo.

DOT Markings: A code molded into the sidewall of a tire signifying that the tire is in compliance with the U.S. Department of Transportation (DOT) Motor Vehicle Safety Standards. The DOT code includes the Tire Identification Number (TIN), an alphanumeric designator which can also identify the tire manufacturer, production plant, brand, and date of production.

GVWR: Gross Vehicle Weight Rating. See *Vehicle Load Limits on page 9-14*.

GAWR FRT: Gross Axle Weight Rating for the front axle. See *Vehicle Load Limits on page 9-14*.

GAWR RR: Gross Axle Weight Rating for the rear axle. See *Vehicle Load Limits on page 9-14*.

Intended Outboard Sidewall: The side of an asymmetrical tire that must always face outward when mounted on a vehicle.

Kilopascal (kPa): The metric unit for air pressure.

Light Truck (LT-Metric) Tire: A tire used on light duty trucks and some multipurpose passenger vehicles.

Load Index: An assigned number ranging from 1 to 279 that corresponds to the load carrying capacity of a tire.

Maximum Inflation Pressure: The maximum air pressure to which a cold tire can be inflated. The maximum air pressure is molded onto the sidewall.

Maximum Load Rating: The load rating for a tire at the maximum permissible inflation pressure for that tire.

Maximum Loaded Vehicle Weight: The sum of curb weight, accessory weight, vehicle capacity weight, and production options weight.

Normal Occupant Weight: The number of occupants a vehicle is designed to seat multiplied by 68 kg (150 lb). See *Vehicle Load Limits on page 9-14*.

Occupant Distribution: Designated seating positions.

Outward Facing Sidewall: The side of an asymmetrical tire that has a particular side that faces

outward when mounted on a vehicle. The side of the tire that contains a whitewall, bears white lettering, or bears manufacturer, brand, and/or model name molding that is higher or deeper than the same moldings on the other sidewall of the tire.

Passenger (P-Metric) Tire: A tire used on passenger cars and some light duty trucks and multipurpose vehicles.

Recommended Inflation Pressure: Vehicle manufacturer's recommended tire inflation pressure as shown on the tire placard. See *Tire Pressure on page 10-65* and *Vehicle Load Limits on page 9-14*.

Radial Ply Tire: A pneumatic tire in which the ply cords that extend to the beads are laid at 90 degrees to the centerline of the tread.

Rim: A metal support for a tire and upon which the tire beads are seated.

Sidewall: The portion of a tire between the tread and the bead.

Speed Rating: An alphanumeric code assigned to a tire indicating the maximum speed at which a tire can operate.

Traction: The friction between the tire and the road surface. The amount of grip provided.

Tread: The portion of a tire that comes into contact with the road.

Treadwear Indicators: Narrow bands, sometimes called wear bars, that show across the tread of a tire when only 1.6 mm (1/16 in) of tread remains. See *When It Is Time for New Tires on page 10-73*.

UTQGS (Uniform Tire Quality Grading Standards): A tire information system that provides consumers with ratings for a tire's traction, temperature, and treadwear. Ratings are determined by tire manufacturers using government testing procedures. The ratings are molded into the sidewall of the tire. See *Uniform Tire Quality Grading on page 10-76*.

Vehicle Capacity Weight: The number of designated seating positions multiplied by 68 kg (150 lb) plus the rated cargo load. See *Vehicle Load Limits on page 9-14*.

Vehicle Maximum Load on the Tire: Load on an individual tire due to curb weight, accessory weight, occupant weight, and cargo weight.

Vehicle Placard: A label permanently attached to a vehicle showing the vehicle capacity weight and the original equipment tire size and recommended inflation pressure. See “Tire and Loading Information Label” under *Vehicle Load Limits on page 9-14*.

Tire Pressure

Tires need the correct amount of air pressure to operate effectively.

⚠ Caution

Neither tire underinflation nor overinflation is good. Underinflated tires, or tires that do not have enough air, can result in:

- Tire overloading and overheating which could lead to a blowout.
- Premature or irregular wear.
- Poor handling.
- Reduced fuel economy.

Overinflated tires, or tires that have too much air, can result in:

- Unusual wear.
- Poor handling.
- Rough ride.
- Needless damage from road hazards.

The Tire and Loading Information label on the vehicle indicates the original equipment tires and the correct cold tire inflation pressures. The recommended pressure is the minimum air pressure needed to support the vehicle's maximum load carrying capacity. See *Vehicle Load Limits on page 9-14*.

How the vehicle is loaded affects vehicle handling and ride comfort. Never load the vehicle with more weight than it was designed to carry.

When to Check

Check the tires once a month or more. Do not forget the compact spare, if the vehicle has one. The cold compact spare tire pressure should be at 420 kPa (60 psi). See *Compact Spare Tire on page 10-95*.

How to Check

Use a good quality pocket-type gauge to check tire pressure. Proper tire inflation cannot be determined by looking at the tire. Check the tire inflation pressure when the tires are cold, meaning the vehicle has not been driven for at least three hours or no more than 1.6 km (1 mi).

Remove the valve cap from the tire valve stem. Press the tire gauge firmly onto the valve to get a pressure measurement. If the cold tire inflation pressure matches the recommended pressure on the Tire and Loading Information label, no further adjustment is necessary. If the inflation pressure is low, add air until the recommended pressure is reached. If the inflation pressure is high, press on the metal stem in the center of the tire valve to release air.

Recheck the tire pressure with the tire gauge.

Return the valve caps on the valve stems to prevent leaks and keep out dirt and moisture.

Tire Pressure for High-Speed Operation

⚠ Warning

Driving at high speeds, 160 km/h (100 mph) or higher, puts an additional strain on tires. Sustained high-speed driving causes excessive heat buildup and can cause sudden tire failure. You could have a crash and you or others could be killed. Some high-speed rated tires require inflation pressure adjustment for high-speed operation. When speed limits and road conditions are such that a vehicle can be driven at high speeds, make sure

(Continued)

Warning (Continued)

the tires are rated for high-speed operation, in excellent condition, and set to the correct cold tire inflation pressure for the vehicle load.

Vehicles with 245/45ZR20 103Y, P245/50ZR19 104W, 275/40ZR20 106Y, 285/35ZR20 (100Y), and 305/35ZR20 (104Y) size tires, have tires capable of high speed use.

Make sure vehicles with 245/45ZR20 103Y, P245/50ZR19 104W and 275/40ZR20 106Y size tires are inflated to the recommended cold inflation pressures before operating the vehicle at speeds over 160 km/h (100 mph). See *Vehicle Load Limits on page 9-14* and *Tire Pressure on page 10-65*.

Make sure vehicles with 285/35ZR20 (100Y), and 305/35ZR20 (104Y) size tires are inflated to

300 kPa (44 psi) before operating the vehicle at speeds of 160 km/h (100 mph) or higher.

Make sure vehicles with 305/30ZR19 (102Y) size tires are inflated to 340 kPa (50 psi) before operating the vehicle at speeds of 160 km/h (100 mph) or higher.

Return the tires to the recommended cold tire inflation pressure when high-speed driving has ended. See *Vehicle Load Limits on page 9-14* and *Tire Pressure on page 10-65*.

Tire Pressure Monitor System

The Tire Pressure Monitor System (TPMS) uses radio and sensor technology to check tire pressure levels. The TPMS sensors monitor the air pressure in your tires and transmit tire pressure readings to a receiver located in the vehicle.

Each tire, including the spare (if provided), should be checked monthly when cold and inflated to the inflation pressure recommended by the vehicle manufacturer on the vehicle placard or tire inflation pressure label. (If your vehicle has tires of a different size than the size indicated on the vehicle placard or tire inflation pressure label, you should determine the proper tire inflation pressure for those tires.)

As an added safety feature, your vehicle has been equipped with a tire pressure monitoring system (TPMS) that illuminates a low tire pressure telltale when one or more of your tires is significantly under-inflated.

Accordingly, when the low tire pressure telltale illuminates, you should stop and check your tires as soon as possible, and inflate them to the proper pressure. Driving on a significantly under-inflated tire causes the tire to overheat and can lead to tire failure. Under-inflation also reduces fuel efficiency and tire tread life, and may affect the vehicle's handling and stopping ability.

Please note that the TPMS is not a substitute for proper tire maintenance, and it is the driver's responsibility to maintain correct tire pressure, even if under-inflation has not reached the level to trigger illumination of the TPMS low tire pressure telltale.

Your vehicle has also been equipped with a TPMS malfunction indicator to indicate when the system is not operating properly. The TPMS malfunction indicator is combined with the low tire pressure telltale. When the system detects a malfunction, the telltale will flash for approximately one minute and then remain continuously illuminated. This sequence will continue upon subsequent vehicle start-ups as long as the malfunction exists.

When the malfunction indicator is illuminated, the system may not be able to detect or signal low tire

pressure as intended. TPMS malfunctions may occur for a variety of reasons, including the installation of replacement or alternate tires or wheels on the vehicle that prevent the TPMS from functioning properly. Always check the TPMS malfunction telltale after replacing one or more tires or wheels on your vehicle to ensure that the replacement or alternate tires and wheels allow the TPMS to continue to function properly.

See *Tire Pressure Monitor Operation on page 10-68*.

See *Radio Frequency Statement on page 13-12*.

Tire Pressure Monitor Operation

This vehicle may have a Tire Pressure Monitor System (TPMS). The TPMS is designed to warn the driver when a low tire pressure condition exists. TPMS sensors are mounted onto each tire and wheel assembly, excluding the spare tire and wheel assembly. The TPMS sensors monitor the air pressure in the tires and transmit the tire pressure readings to a receiver located in the vehicle.

When a low tire pressure condition is detected, the TPMS illuminates the low tire pressure warning light located on the instrument cluster. If the warning light comes on, stop as soon as possible and inflate the tires to the recommended pressure shown on the Tire and Loading Information label. See *Vehicle Load Limits on page 9-14*.

A message to check the pressure in a specific tire displays in the Driver Information Center (DIC) display. The low tire pressure warning light and the DIC warning message come on at each ignition cycle until the tires are inflated to the correct inflation pressure. Using the DIC, tire pressure levels can be viewed. For additional information and details about the DIC operation and displays see *Driver Information Center (DIC) on page 5-24*.

The low tire pressure warning light may come on in cool weather when the vehicle is first started, and then turn off as the vehicle is driven. This could be an early indicator that the air pressure is getting low and must be inflated to the proper pressure.

A Tire and Loading Information label shows the size of the original equipment tires and the correct inflation pressure for the tires when they are cold. See *Vehicle Load Limits on page 9-14*, for an example of the Tire and Loading Information label and its location. Also see *Tire Pressure on page 10-65*.

The TPMS can warn about a low tire pressure condition but it does not replace normal tire maintenance. See *Tire Inspection on page 10-71*, *Tire Rotation on page 10-71* and *Tires on page 10-56*.

⚠ Caution

Tire sealant materials are not all the same. A non-approved tire sealant could damage the TPMS sensors. TPMS sensor damage caused by using an incorrect tire sealant is not covered by the vehicle warranty. Always use only the GM approved tire sealant available through your dealer or included in the vehicle.

Factory-installed Tire Inflator Kits use a GM-approved liquid tire sealant. Using non-approved tire sealants could damage the TPMS sensors. See *Tire Sealant and Compressor Kit on page 10-81* for information regarding the inflator kit materials and instructions.

TPMS Malfunction Light and Message

The TPMS will not function properly if one or more of the TPMS sensors are missing or inoperable. When the system detects a malfunction, the low tire warning light flashes for about one minute and then stays on for the remainder of the ignition cycle. A DIC warning message also displays. The malfunction light and DIC warning message come on at each ignition cycle until the problem is corrected. Some of the conditions that can cause these to come on are:

- One of the road tires has been replaced with the spare tire. The spare tire does not have a TPMS sensor. The malfunction light and DIC message should go off after the road tire is replaced and the sensor matching process is performed successfully. See "TPMS Sensor Matching Process" later in this section.
- The TPMS sensor matching process was not done or not completed successfully after rotating the tires. The malfunction light and the DIC message should go off after successfully completing the sensor matching process. See "TPMS Sensor Matching Process" later in this section.
- One or more TPMS sensors are missing or damaged. The DIC message and the malfunction light should go off when the TPMS sensors are installed and the sensor matching process is performed successfully. See your dealer for service.
- Replacement tires or wheels do not match the original equipment tires or wheels. Tires and wheels other than those recommended

could prevent the TPMS from functioning properly. See *Buying New Tires on page 10-74*.

- Operating electronic devices or being near facilities using radio wave frequencies similar to the TPMS could cause the TPMS sensors to malfunction.

If the TPMS is not functioning properly, it cannot detect or signal a low tire condition. See your dealer for service if the TPMS malfunction light and DIC message come on and stay on.

TPMS Sensor Matching Process

Each TPMS sensor has a unique identification code. The identification code needs to be matched to a new tire/wheel position after rotating the tires or replacing one or more of the TPMS sensors. The TPMS sensor matching process should also be performed after replacing a spare tire with a road tire containing the TPMS sensor. The malfunction light and the DIC message should go off at the next ignition cycle. The sensors are matched to the tire/wheel positions, using a TPMS relearn tool, in the following order: driver side front tire, passenger side front tire, passenger side rear tire, and driver side rear. See your dealer for service or to purchase a relearn tool. A TPMS relearn tool can also be purchased. See Tire Pressure Monitor Sensor Activation Tool at www.gmtoolsandequipment.com or call 1-800-GM TOOLS (1-800-468-6657).

There are two minutes to match the first tire/wheel position, and five minutes overall to match all four tire/wheel positions. If it takes longer, the matching process stops and must be restarted.

The TPMS sensor matching process is:

1. Set the parking brake.
2. Turn the ignition to ON/RUN with the engine off.
3. Use the MENU button to select the Vehicle Information menu in the Driver Information Center (DIC).
4. Use the thumbwheel to scroll to the Tire Pressure Menu item screen.
5. Press the SET/CLR button to begin the sensor matching process.

   A message requesting acceptance of the process should display.
6. Press the SET/CLR button again to confirm the selection.

   The horn sounds twice to signal the receiver is in relearn mode and the TIRE LEARNING ACTIVE message displays on the DIC screen.
7. Start with the driver side front tire.
8. Place the relearn tool against the tire sidewall, near the valve stem. Then press the button to activate the TPMS sensor.

A horn chirp confirms that the sensor identification code has been matched to this tire and wheel position.

9. Proceed to the passenger side front tire, and repeat the procedure in Step 8.
10. Proceed to the passenger side rear tire, and repeat the procedure in Step 8.
11. Proceed to the driver side rear tire, and repeat the procedure in Step 8. The horn sounds two times to indicate the sensor identification code has been matched to the driver side rear tire, and the TPMS sensor matching process is no longer active. The TIRE LEARNING ACTIVE message on the DIC display screen goes off.
12. Turn the ignition to LOCK/OFF.
13. Set all four tires to the recommended air pressure level as indicated on the Tire and Loading Information label.

Tire Inspection

We recommend that the tires, including the spare tire, if the vehicle has one, be inspected for signs of wear or damage at least once a month.

Replace the tire if:

- The indicators at three or more places around the tire can be seen.
- There is cord or fabric showing through the tire's rubber.
- The tread or sidewall is cracked, cut, or snagged deep enough to show cord or fabric.
- The tire has a bump, bulge, or split.
- The tire has a puncture, cut, or other damage that cannot be repaired well because of the size or location of the damage.

Tire Rotation

If the vehicle has non-directional tires, they should be rotated every 12 000 km/7,500 mi. See *Maintenance Schedule on page 11-2*.

Tires are rotated to achieve a uniform wear for all tires. The first rotation is the most important.

Anytime unusual wear is noticed, rotate the tires as soon as possible, check for proper tire inflation pressure, and check for damaged tires or wheels. If the unusual wear continues after the

rotation, check the wheel alignment. See *When It Is Time for New Tires on page 10-73* and *Wheel Replacement on page 10-78*.

Directional tires should not be rotated. Each tire and wheel should be used only in the position it is in. Directional tires will have an arrow on the tire indicating the proper direction of rotation or will have “left” or “right” molded on the sidewall.

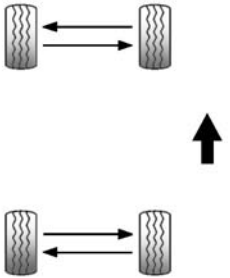

Use this rotation pattern if the vehicle has different size tires on the front and rear and they are non-directional.

Different tire sizes should not be rotated front to rear.

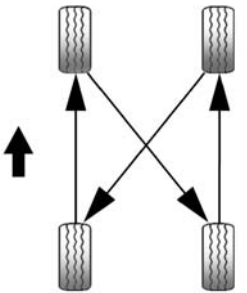

Use this rotation pattern when rotating tires of the same size installed on all four wheel positions.

If the vehicle has a compact spare tire, do not include it in the tire rotation.

Adjust the front and rear tires to the recommended inflation pressure on the Tire and Loading Information label after the tires have been rotated. See *Tire Pressure on page 10-65* and *Vehicle Load Limits on page 9-14*.

Reset the Tire Pressure Monitor System. See *Tire Pressure Monitor Operation on page 10-68*.

Check that all wheel nuts are properly tightened. See “Wheel Nut Torque” under *Capacities and Specifications on page 12-2*.

⚠ Warning

Rust or dirt on a wheel, or on the parts to which it is fastened, can make wheel nuts become loose after time. The wheel could come

(Continued)

Warning (Continued)

off and cause an accident. When changing a wheel, remove any rust or dirt from places where the wheel attaches to the vehicle. In an emergency, a cloth or a paper towel can be used; however, use a scraper or wire brush later to remove all rust or dirt.

Lightly coat the center of the wheel hub with wheel bearing grease after a wheel change or tire rotation to prevent corrosion or rust build-up. Do not get grease on the flat wheel mounting surface or on the wheel nuts or bolts.

When It Is Time for New Tires

Factors such as maintenance, temperatures, driving speeds, vehicle loading, and road conditions affect the wear rate of the tires.

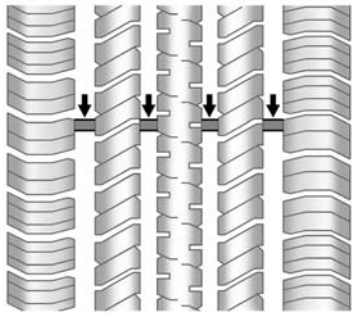

Treadwear indicators are one way to tell when it is time for new tires. Treadwear indicators appear when the tires have only 1.6 mm (1/16 in) or less of tread remaining. See *Tire Inspection on page 10-71* and *Tire Rotation on page 10-71*.

The rubber in tires ages over time. This also applies to the spare tire, if the vehicle has one, even if it is never used. Multiple factors including temperatures, loading conditions, and inflation pressure maintenance affect how fast aging takes place. GM recommends that tires, including the spare if equipped, be replaced after six years, regardless of tread wear. The tire manufacture date is the last four digits of the DOT Tire Identification Number (TIN) which is molded into one side of the tire sidewall. The first two digits represent the week (01–52) and the last two digits, the year. For example, the third week of the year 2010 would have a four-digit DOT date of 0310.

Vehicle Storage

Tires age when stored normally mounted on a parked vehicle. Park a vehicle that will be stored for at least a month in a cool, dry, clean area away from direct sunlight to slow aging. This area should be free

of grease, gasoline, or other substances that can deteriorate rubber.

Parking for an extended period can cause flat spots on the tires that may result in vibrations while driving. When storing a vehicle for at least a month, remove the tires or raise the vehicle to reduce the weight from the tires.

Buying New Tires

GM has developed and matched specific tires for the vehicle. The original equipment tires installed were designed to meet General Motors Tire Performance Criteria Specification (TPC Spec) system rating. When replacement tires are needed, GM strongly recommends buying tires with the same TPC Spec rating.

GM's exclusive TPC Spec system considers over a dozen critical specifications that impact the overall performance of the vehicle, including brake system performance, ride and handling, traction control, and tire pressure monitoring performance. GM's TPC Spec number is molded onto the tire's sidewall near the tire size. If the tires have an all-season tread design, the TPC Spec number will be followed by MS for mud and snow. Although developed to comply with GM's TPC Spec, vehicles equipped with 305/30ZR19 tires will not have a TPC Spec number molded onto the sidewall. See *Tire Sidewall Labeling on page 10-59*.

GM recommends replacing worn tires in complete sets of four. Uniform tread depth on all tires will help to maintain the performance of the vehicle. Braking and handling performance may be adversely affected if all the tires are not replaced at the same time. If proper rotation and maintenance have been done, all four tires should wear out at about the same time. See *Tire Rotation on page 10-71*. However, if it is necessary to replace only one axle set of worn tires, place the new tires on the rear axle.

Winter tires with the same speed rating as the original equipment tires may not be available for H, V, W, Y and ZR speed rated tires. Never exceed the winter tires' maximum speed capability when using winter tires with a lower speed rating.

⚠ Warning

Tires could explode during improper service. Attempting to mount or dismount a tire

(Continued)

Warning (Continued)

could cause injury or death. Only your dealer or authorized tire service center should mount or dismount the tires.

⚠ Warning

Mixing tires of different sizes, brands, or types may cause loss of control of the vehicle, resulting in a crash or other vehicle damage. Use the correct size, brand, and type of tires on all wheels.

⚠ Warning

Using bias-ply tires on the vehicle may cause the wheel rim flanges to develop cracks

(Continued)

Warning (Continued)

after many miles of driving. A tire and/or wheel could fail suddenly and cause a crash. Use only radial-ply tires with the wheels on the vehicle.

If the vehicle tires must be replaced with a tire that does not have a TPC Spec number, make sure they are the same size, load range, speed rating, and construction (radial) as the original tires.

Vehicles that have a tire pressure monitoring system could give an inaccurate low-pressure warning if non-TPC Spec rated tires are installed. See *Tire Pressure Monitor System on page 10-67*.

The Tire and Loading Information label indicates the original equipment tires on the vehicle. See *Vehicle Load Limits on page 9-14*.

Different Size Tires and Wheels

If wheels or tires are installed that are a different size than the original equipment wheels and tires, vehicle performance, including its braking, ride and handling characteristics, stability, and resistance to rollover may be affected. If the vehicle has electronic systems such as antilock brakes, rollover airbags, traction control, electronic stability control, or All-Wheel Drive, the performance of these systems can also be affected.

⚠ Warning

If different sized wheels are used, there may not be an acceptable level of performance and safety if tires not recommended for those wheels are selected. This increases the chance of a crash and serious injury. Only use GM specific wheel and tire systems developed for the vehicle, and have them properly installed by a GM certified technician.

See *Buying New Tires on page 10-74* and *Accessories and Modifications on page 10-3*.

Uniform Tire Quality Grading

Quality grades can be found where applicable on the tire sidewall between tread shoulder and maximum section width. For example:

Treadwear 200 Traction AA Temperature A

The following information relates to the system developed by the United States National Highway Traffic Safety Administration (NHTSA), which grades tires by treadwear, traction, and temperature performance. This applies only to vehicles sold in the United States. The grades are molded on the sidewalls of most passenger car tires. The Uniform Tire Quality Grading (UTQG) system does not apply to deep tread, winter tires, compact spare tires, tires with nominal rim diameters of 10 to 12 inches (25 to 30 cm), or to some limited-production tires.

While the tires available on General Motors passenger cars and light trucks may vary with respect to these grades, they must also conform to federal safety requirements and additional General Motors Tire Performance Criteria (TPC) standards.

All Passenger Car Tires Must Conform to Federal Safety Requirements In Addition To These Grades.

Treadwear

The treadwear grade is a comparative rating based on the wear rate of the tire when tested under controlled conditions on a specified government test course. For example, a tire graded 150 would wear one and one-half (1½) times as well on the government course as a tire graded 100. The relative performance of tires depends upon the actual conditions of their use, however, and may depart significantly from the norm due to variations in driving

habits, service practices and differences in road characteristics and climate.

Traction

The traction grades, from highest to lowest, are AA, A, B, and C. Those grades represent the tire's ability to stop on wet pavement as measured under controlled conditions on specified government test surfaces of asphalt and concrete. A tire marked C may have poor traction performance. Warning: The traction grade assigned to this tire is based on straight-ahead braking traction tests, and does not include acceleration, cornering, hydroplaning, or peak traction characteristics.

Temperature

The temperature grades are A (the highest), B, and C, representing the tire's resistance to the generation of heat and its ability to dissipate heat when tested under controlled conditions on a specified indoor laboratory test wheel. Sustained high temperature can cause the material of the tire to degenerate and reduce tire life, and excessive temperature can lead to sudden tire failure. The grade C corresponds to a level of performance which all passenger car tires must meet under the Federal Motor Safety Standard No. 109. Grades B and A represent higher levels of performance on the laboratory test wheel than the minimum required by law. Warning: The temperature grade for this tire is established for a tire that is properly inflated and not overloaded. Excessive speed, underinflation, or excessive loading, either separately or in combination, can cause heat buildup and possible tire failure.

Wheel Alignment and Tire Balance

The tires and wheels were aligned and balanced at the factory to provide the longest tire life and best overall performance. Adjustments to wheel alignment and tire balancing are not necessary on a regular basis. Consider an alignment check if there is unusual tire wear or the vehicle is significantly pulling to one side or the other. Some slight pull to the left or right, depending on the crown of the road and/or other road surface variations such as troughs or ruts, is normal. If the vehicle is vibrating when driving on a smooth road, the tires and wheels may need to be rebalanced. See your dealer for proper diagnosis.

Wheel Replacement

Replace any wheel that is bent, cracked, or badly rusted or corroded. If wheel nuts keep coming loose, the wheel, wheel bolts, and wheel nuts should be replaced.
If the wheel leaks air, replace it. Some aluminum wheels can be repaired. See your dealer if any of these conditions exist.

Your dealer will know the kind of wheel that is needed.

Each new wheel should have the same load-carrying capacity, diameter, width, offset, and be mounted the same way as the one it replaces.

Replace wheels, wheel bolts, wheel nuts, or Tire Pressure Monitor System (TPMS) sensors with new GM original equipment parts.

⚠ Warning

Using the wrong replacement wheels, wheel bolts, or wheel nuts can be dangerous. It could affect the braking and handling of the vehicle. Tires can lose air, and cause loss of control, causing a crash. Always use the correct wheel, wheel bolts, and wheel nuts for replacement.

⚠ Caution

The wrong wheel can also cause problems with bearing life, brake cooling, speedometer or odometer calibration, headlamp aim, rear differential, bumper height, vehicle ground clearance, and tire or tire chain clearance to the body and chassis.

See *If a Tire Goes Flat on page 10-79* for more information.

Used Replacement Wheels

⚠ Warning

Replacing a wheel with a used one is dangerous. How it has been used or how far it has been driven may be unknown. It could fail suddenly and cause a crash. When replacing wheels, use a new GM original equipment wheel.

Tire Chains

⚠ Warning

Do not use tire chains. There is not enough clearance. Tire chains used on a vehicle without the proper amount of clearance can cause damage to the brakes, suspension, or other vehicle parts. The area damaged by the tire chains could cause loss of control and a crash. Use another type of traction device only if its manufacturer recommends it for the vehicle's tire size combination and road conditions. Follow that manufacturer's instructions. To avoid vehicle damage, drive slowly and readjust or remove the traction device if it contacts the vehicle. Do not spin the wheels. If traction devices are used, install them on the rear tires.

If a Tire Goes Flat

It is unusual for a tire to blow out while driving, especially if the tires are maintained properly. See *Tires on page 10-56*. If air goes out of a tire, it is much more likely to leak out slowly. But if there is ever a blowout, here are a few tips about what to expect and what to do:

If a front tire fails, the flat tire creates a drag that pulls the vehicle toward that side. Take your foot off the accelerator pedal and grip the steering wheel firmly. Steer to maintain lane position, and then gently brake to a stop, well off the road, if possible.

A rear blowout, particularly on a curve, acts much like a skid and may require the same correction as used in a skid. Stop pressing the accelerator pedal and steer to straighten the vehicle. It may be very bumpy and noisy. Gently brake to a stop, well off the road, if possible.

⚠ Warning

Driving on a flat tire will cause permanent damage to the tire. Re-inflating a tire after it has been driven on while severely underinflated or flat may cause a blowout and a serious crash. Never attempt to re-inflate a tire that has been driven on while severely underinflated or flat. Have your dealer or an authorized tire service center repair or replace the flat tire as soon as possible.

⚠ Warning

Lifting a vehicle and getting under it to do maintenance or repairs is dangerous without the appropriate safety equipment and training. If a jack is provided with the vehicle, it is designed only for

(Continued)

Warning (Continued)

changing a flat tire. If it is used for anything else, you or others could be badly injured or killed if the vehicle slips off the jack. If a jack is provided with the vehicle, only use it for changing a flat tire.

If a tire goes flat, avoid further tire and wheel damage by driving slowly to a level place, well off the road, if possible. Turn on the hazard warning flashers. See *Hazard Warning Flashers on page 6-4*.

⚠ Warning

Changing a tire can be dangerous. The vehicle can slip off the jack and roll over or fall causing injury or death. Find a level place to change the tire. To help prevent the vehicle from moving:

(Continued)

Warning (Continued)

1. Set the parking brake firmly.
2. Put an automatic transmission in P (Park) or a manual transmission in 1 (First) or R (Reverse).
3. Turn off the engine and do not restart while the vehicle is raised.
4. Do not allow passengers to remain in the vehicle.
5. Place wheel blocks on both sides of the tire at the opposite corner of the tire being changed.

This vehicle may come with a jack and spare tire or a tire sealant and compressor kit. To use the jacking equipment to change a spare tire safely, follow the instructions below. Then see *Tire Changing on page 10-89*. To use the tire sealant and compressor kit, see *Tire Sealant and Compressor Kit on page 10-81*.

When the vehicle has a flat tire (2), use the following example as a guide to assist you in the placement of wheel blocks (1).

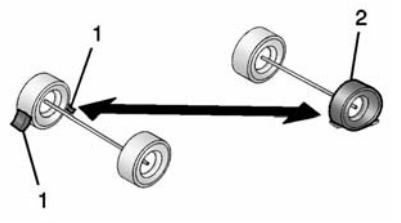

1. Wheel Block
2. Flat Tire

The following information explains how to repair or change a tire.

Tire Sealant and Compressor Kit

⚠ Warning

Idling a vehicle in an enclosed area with poor ventilation is dangerous. Engine exhaust may enter the vehicle. Engine exhaust contains carbon monoxide (CO) which cannot be seen or smelled. It can cause unconsciousness and even death. Never run the engine in an enclosed area that has no fresh air ventilation. For more information, see *Engine Exhaust on page 9-27*.

⚠ Warning

Overinflating a tire could cause the tire to rupture and you or others could be injured. Be sure to read and follow the tire sealant

(Continued)

Warning (Continued)

and compressor kit instructions and inflate the tire to its recommended pressure. Do not exceed the recommended pressure.

⚠ Warning

Storing the tire sealant and compressor kit or other equipment in the passenger compartment of the vehicle could cause injury. In a sudden stop or collision, loose equipment could strike someone. Store the tire sealant and compressor kit in its original location.

Tire sealant may not completely seal a 305/35ZR20 tire below –18°C (0°F).

If this vehicle has a tire sealant and compressor kit, there may not be a spare tire or tire changing equipment, and on some vehicles there may not be a place to store a tire.

The tire sealant and compressor can be used to temporarily seal punctures up to 6 mm (0.25 in) in the tread area of the tire. It can also be used to inflate an underinflated tire.

If the tire has been separated from the wheel, has damaged sidewalls, or has a large puncture, the tire is too severely damaged for the tire sealant and compressor kit to be effective. See *Roadside Assistance Program on page 13-5*.

Read and follow all of the tire sealant and compressor kit instructions.

The kit includes:

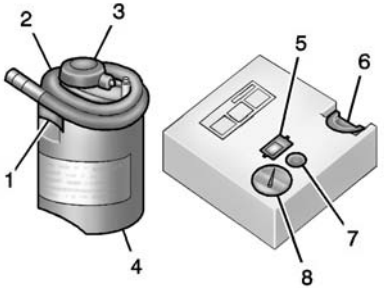

1. Sealant Canister Inlet Valve
2. Sealant/Air Hose
3. Base of Sealant Canister
4. Tire Sealant Canister
5. On/Off Button
6. Slot on Top of Compressor
7. Pressure Deflation Button
8. Pressure Gauge

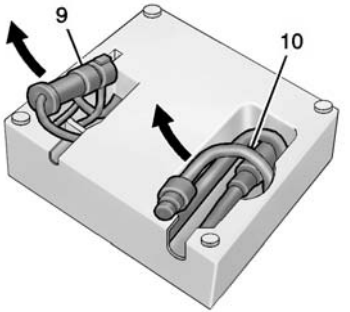

9. Power Plug
10. Air Only Hose

Tire Sealant

Read and follow the safe handling instructions on the label adhered to the tire sealant canister (4).

Check the tire sealant expiration date on the tire sealant canister. The tire sealant canister (4) should be replaced before its expiration date. Replacement tire sealant canisters are available at your local dealer.

There is only enough sealant to seal one tire. After usage, the tire sealant canister must be replaced.

Using the Tire Sealant and Compressor Kit to Temporarily Seal and Inflate a Punctured Tire

When using the tire sealant and compressor kit during cold temperatures, warm the kit in a heated environment for five minutes. This will help to inflate the tire faster.

If a tire goes flat, avoid further tire and wheel damage by driving slowly to a level place. Turn on the hazard warning flashers. See *Hazard Warning Flashers on page 6-4*.

See *If a Tire Goes Flat on page 10-79* for other important safety warnings.

Do not remove any objects that have penetrated the tire.

1. Remove the tire sealant canister (4) and compressor from its storage location. See *Storing the Tire Sealant and Compressor Kit on page 10-88*.
2. Remove the air only hose (10) and the power plug (9) from the bottom of the compressor.
3. Place the compressor on the ground near the flat tire.

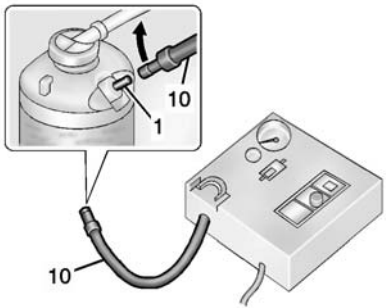

4. Attach the air only hose (10) to the sealant canister inlet valve (1) by turning it clockwise until tight.

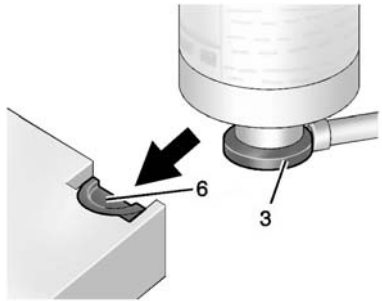

5. Slide the base of the tire sealant canister (3) into the slot on the top of the compressor (6) to hold it upright.

   Make sure the tire valve stem is positioned close to the ground so the hose will reach it.
6. Remove the valve stem cap from the flat tire by turning it counterclockwise.

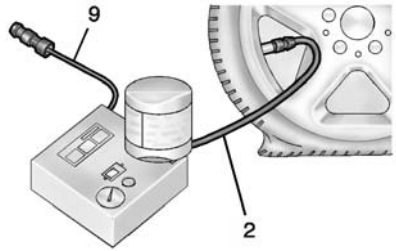

7. Attach the sealant/air hose (2) to the tire valve stem by turning it clockwise until tight.

8. Plug the power plug (9) into the accessory power outlet in the vehicle. Unplug all items from other accessory power outlets. See *Power Outlets on page 5-5*.

   If the vehicle has an accessory power outlet, do not use the cigarette lighter.

   If the vehicle only has a cigarette lighter, use the cigarette lighter.

   Do not pinch the power plug cord in the door or window.

9. Start the vehicle. The vehicle must be running while using the air compressor.

10. Press the on/off button (5) to turn the tire sealant and compressor kit on.

    The compressor will inject sealant and air into the tire.

    The pressure gauge (8) will initially show a high pressure while the compressor pushes the sealant into the tire. Once the sealant is completely dispersed into the tire, the pressure will quickly drop and start to rise again as the tire inflates with air only.

11. Inflate the tire to the recommended inflation pressure using the pressure gauge (8). The recommended inflation pressure can be found on the Tire and Loading Information label. See *Tire Pressure on page 10-65*.

    The pressure gauge (8) may read higher than the actual tire pressure while the compressor is on. Turn the compressor off to get an accurate pressure reading. The compressor may be turned on/off until the correct pressure is reached.

⚠ Caution

If the recommended pressure cannot be reached after approximately 25 minutes, the vehicle should not be driven

(Continued)

Caution (Continued)

farther. The tire is too severely damaged and the tire sealant and compressor kit cannot inflate the tire. Remove the power plug from the accessory power outlet and unscrew the inflating hose from the tire valve. See *Roadside Assistance Program on page 13-5*.

12. Press the on/off button (5) to turn the tire sealant and compressor kit off.

    The tire is not sealed and will continue to leak air until the vehicle is driven and the sealant is distributed in the tire. Therefore, Steps 13–21 must be done immediately after Step 12.

    Be careful while handling the tire sealant and compressor kit as it could be warm after usage.

13. Unplug the power plug (9) from the accessory power outlet in the vehicle.
14. Turn the sealant/air hose (2) counterclockwise to remove it from the tire valve stem.
15. Replace the tire valve stem cap.
16. Remove the tire sealant canister (4) from the slot on top of the compressor (6).
17. Turn the air only hose (10) counterclockwise to remove it from the tire sealant canister inlet valve (1).
18. Turn the sealant/air hose (2) clockwise onto the sealant canister inlet valve (1) to prevent sealant leakage.
19. Return the air only hose (10) and power plug (9) back to their original storage location.

20. If the flat tire was able to inflate to the recommended inflation pressure, remove the maximum speed label from the sealant canister and place it in a highly visible location.

    Do not exceed the speed on this label until the damaged tire is repaired or replaced.
21. Return the equipment to its original storage location in the vehicle.
22. Immediately drive the vehicle 8 km (5 mi) to distribute the sealant in the tire.
23. Stop at a safe location and check the tire pressure. Refer to Steps 1–10 under “Using the Tire Sealant and Compressor Kit without Sealant to Inflate a Tire (Not Punctured).”

    If the tire pressure has fallen more than 68 kPa (10 psi) below the recommended inflation pressure, stop driving the vehicle. The tire is too severely damaged and the tire sealant cannot seal the tire. See *Roadside Assistance Program on page 13-5*.

    If the tire pressure has not dropped more than 68 kPa (10 psi) from the recommended inflation pressure, inflate the tire to the recommended inflation pressure.

24. Wipe off any sealant from the wheel, tire, or vehicle.
25. Dispose of the used tire sealant canister (4) at a local dealer or in accordance with local state codes and practices.
26. Replace it with a new canister available from your dealer.
27. After temporarily sealing a tire using the tire sealant and compressor kit, take the vehicle to an authorized dealer within 161 km (100 mi) of driving to have the tire repaired or replaced.

Using the Tire Sealant and Compressor Kit without Sealant to Inflate a Tire (Not Punctured)

The kit includes:

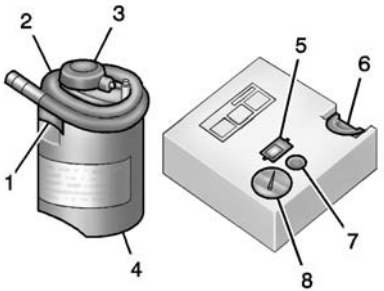

1. Sealant Canister Inlet Valve
2. Sealant/Air Hose
3. Base of Sealant Canister
4. Tire Sealant Canister
5. On/Off Button
6. Slot on Top of Compressor
7. Pressure Deflation Button
8. Pressure Gauge

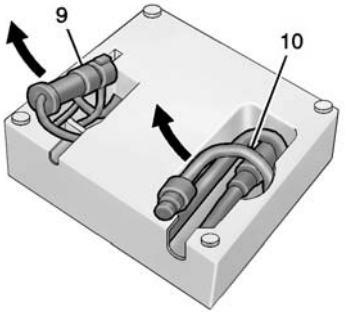

9. Power Plug
10. Air Only Hose

If a tire goes flat, avoid further tire and wheel damage by driving slowly to a level place. Turn on the hazard warning flashers. See *Hazard Warning Flashers on page 6-4*.

See *If a Tire Goes Flat on page 10-79* for other important safety warnings.

1. Remove the compressor from its storage location. See *Storing the Tire Sealant and Compressor Kit on page 10-88*.

2. Remove the air only hose (10) and the power plug (9) from the bottom of the compressor.
3. Place the compressor on the ground near the flat tire.

   Make sure the tire valve stem is positioned close to the ground so the hose will reach it.
4. Remove the valve stem cap from the flat tire by turning it counterclockwise.
5. Attach the air only hose (10) to the tire valve stem by turning it clockwise until tight.
6. Plug the power plug (9) into the accessory power outlet in the vehicle. Unplug all items from other accessory power outlets. See *Power Outlets on page 5-5*.

   If the vehicle has an accessory power outlet, do not use the cigarette lighter.

   If the vehicle only has a cigarette lighter, use the cigarette lighter.

   Do not pinch the power plug cord in the door or window.
7. Start the vehicle. The vehicle must be running while using the air compressor.
8. Press the on/off button (5) to turn the tire sealant and compressor kit on.

   The compressor will inflate the tire with air only.
9. Inflate the tire to the recommended inflation pressure using the pressure gauge (8). The recommended inflation pressure can be found on the Tire and Loading Information label. See *Tire Pressure on page 10-65*.

   The pressure gauge (8) may read higher than the actual tire pressure while the compressor is on. Turn the compressor off to get an accurate pressure reading. The compressor may be turned on/off until the correct pressure is reached.

⚠ Caution

If the recommended pressure cannot be reached after approximately 25 minutes, the vehicle should not be driven farther. The tire is too severely damaged and the tire sealant and compressor kit cannot inflate the

(Continued)

Caution (Continued)

tire. Remove the power plug from the accessory power outlet and unscrew the inflating hose from the tire valve. See *Roadside Assistance Program on page 13-5*.

10. Press the on/off button (5) to turn the tire sealant and compressor kit off.

    Be careful while handling the compressor as it could be warm after usage.

11. Unplug the power plug (9) from the accessory power outlet in the vehicle.
12. Turn the air only hose (10) counterclockwise to remove it from the tire valve stem.
13. Replace the tire valve stem cap.
14. Return the air only hose (10) and power plug (9) back to their original storage location.
15. Return the equipment to its original storage location in the vehicle.

The tire sealant and compressor kit has accessory adapters located in a compartment on the bottom of its housing that can be used to inflate air mattresses, balls, etc.

Storing the Tire Sealant and Compressor Kit

The tire sealant and compressor kit is in a case in the trunk.

1. Open the trunk. See *Trunk on page 2-9*.
2. Remove the carpet.

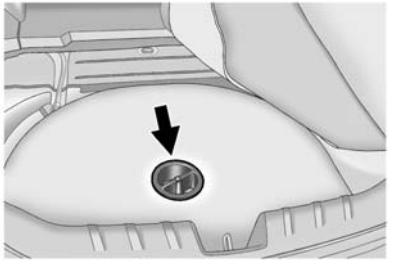

3. Turn the center retainer counterclockwise to remove the cover.

4. Remove the tire sealant and compressor kit case.
5. Open the case.

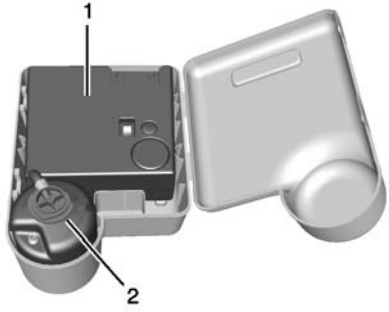

6. Remove the compressor (1) and the sealant canister (2).

To store the tire sealant and compressor kit, reverse the steps.

Tire Changing

Removing the Spare Tire and Tools

Spare Tire

1. Open the trunk. See *Trunk on page 2-9*.
2. Remove the carpet.

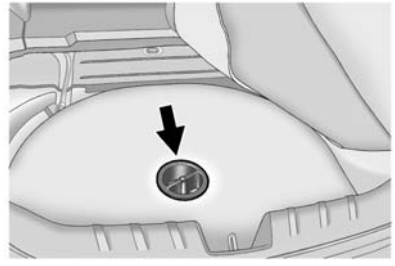

3. Turn the center retainer counterclockwise to remove the spare tire cover.
4. Remove the spare tire and place it next to the tire being changed.

Tools

The jack and tools are stored below the spare tire.

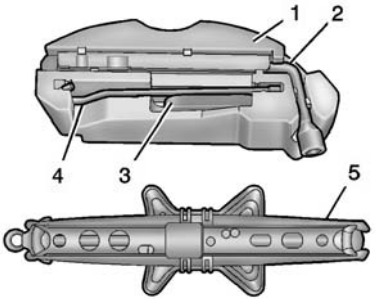

Coin/Pierce Jack with Two-Piece Wrench

1. Tool Container
2. Two-Piece Wrench
3. Strap
4. Jack Handle Extension
5. Coin/Pierce Jack

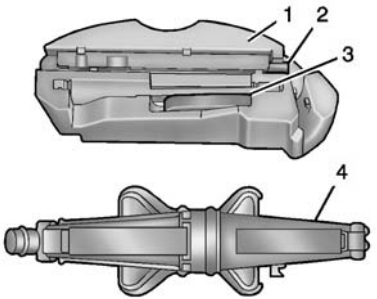

Hex-Head Jack with Three-Piece Wrench

1. Tool Container
2. Three-Piece Wrench
3. Strap
4. Hex Head Jack

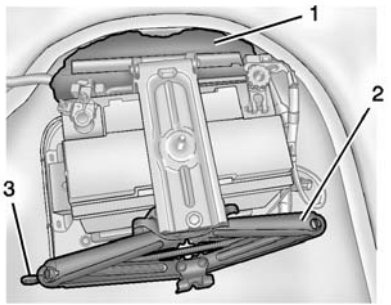

1. Tool Container
2. Jack
3. End of the Jack

1. Turn the end of the jack (3) counterclockwise to loosen it. Remove the jack (2) from the retaining bracket.
2. Remove the tool container (1).
3. Remove the tools and tire strap from the tool container.
4. Place the tools next to the tire being changed.

Removing the Flat Tire and Installing the Spare Tire

1. Do a safety check before proceeding. See *If a Tire Goes Flat on page 10-79* for more information.
2. If the vehicle has wheel bolt caps, remove the caps. Store the caps with the wheel cover.

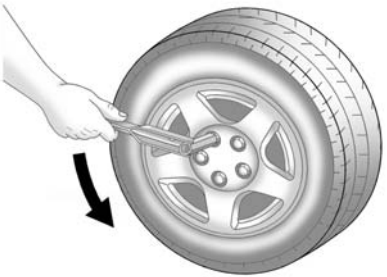

3. Use the fully extended wheel wrench to loosen all the wheel nuts one-half turn counterclockwise. Do not remove them yet.

⚠ Caution

Make sure that the jack lift head is in the correct position or you may damage your vehicle. The repairs would not be covered by your warranty.

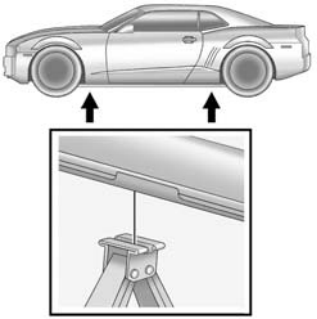

4. Position the jack lift head at the jack location nearest the flat tire. The location is indicated by a mark on the bottom edge of the vehicle. The jack must not be used in any other position.

   Raise the jack until it engages with the jacking point.

⚠ Warning

Getting under a vehicle when it is lifted on a jack is dangerous. If the vehicle slips off the jack, you could be badly injured or killed. Never get under a vehicle when it is supported only by a jack.

⚠ Warning

Lifting a vehicle and getting under it to do maintenance or repairs is dangerous without the

(Continued)

Warning (Continued)

appropriate safety equipment and training. If a jack is provided with the vehicle, it is designed only for changing a flat tire. If it is used for anything else, you or others could be badly injured or killed if the vehicle slips off the jack. If a jack is provided with the vehicle, only use it for changing a flat tire.

⚠ Warning

Raising the vehicle with the jack improperly positioned can damage the vehicle and even make the vehicle fall. To help avoid personal injury and vehicle damage, be sure to fit the jack lift head into the proper location before raising the vehicle.

5. If you have a coin/pierce jack, attach the jack handle extension to the jack by sliding the hook through the end of the jack and insert the other end of the jack handle into the wrench.

   If you have a hex head jack, place the hex tube end of the wrench over the hex head of the jack.

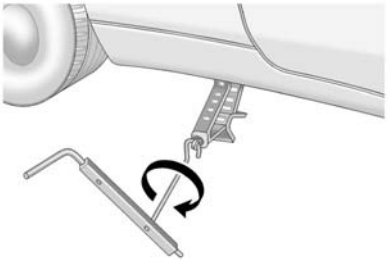

Coin/Pierce Jack and Wrench

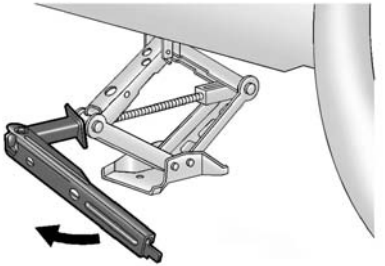

Hex Head Jack and Wrench

6. Raise the vehicle by turning the wrench clockwise until the vehicle is far enough off the ground to allow enough room for the compact spare tire to fit under the vehicle.

   Keep the hook parallel to the ground. The wrench may need to be removed and repositioned to continue turning it.

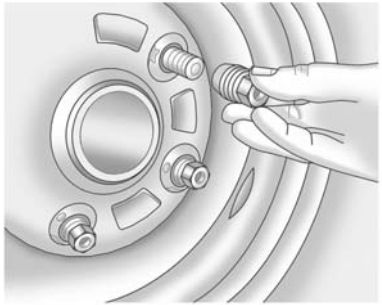

7. Remove all of the wheel nuts and place them in a dry, clean place to avoid getting dirt in the threads.

⚠ Warning

Rust or dirt on a wheel, or on the parts to which it is fastened, can make wheel nuts become loose after time. The wheel could come off and cause an accident. When changing a wheel, remove any rust or dirt from places where the

(Continued)

Warning (Continued)

wheel attaches to the vehicle. In an emergency, a cloth or a paper towel can be used; however, use a scraper or wire brush later to remove all rust or dirt.

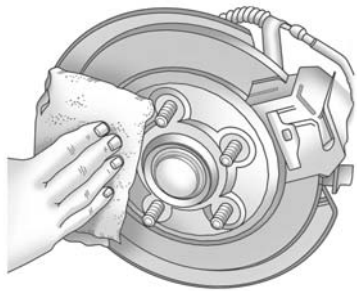

8. Remove any rust or dirt from the wheel bolts, mounting surfaces, and spare wheel.
9. Place the compact spare tire on the wheel-mounting surface.

⚠ Warning

Never use oil or grease on bolts or nuts because the nuts might come loose. The vehicle's wheel could fall off, causing a crash.

10. Reinstall the wheel nuts with the rounded end of the nuts toward the wheel. Tighten each nut as much as possible using the wheel wrench until the wheel is held firmly against the hub.

    Use your free hand to prevent the wheel from turning while you are tightening.
11. Lower the vehicle by turning the wrench counterclockwise. Lower the jack completely.

12. Tighten the wheel nuts firmly in a crisscross sequence, as shown.

⚠ Warning

Wheel nuts that are improperly or incorrectly tightened can cause the wheels to become loose or come off. The wheel nuts should be tightened with a torque wrench to the proper torque specification after replacing. Follow the torque specification supplied by the

(Continued)

Warning (Continued)

aftermarket manufacturer when using accessory locking wheel nuts. See *Capacities and Specifications on page 12-2* for original equipment wheel nut torque specifications.

⚠ Caution

Improperly tightened wheel nuts can lead to brake pulsation and rotor damage. To avoid expensive brake repairs, evenly tighten the wheel nuts in the proper sequence and to the proper torque specification. See *Capacities and Specifications on page 12-2* for the wheel nut torque specification.

Storing a Flat or Spare Tire and Tools

⚠ Warning

Storing a jack, a tire, or other equipment in the passenger compartment of the vehicle could cause injury. In a sudden stop or collision, loose equipment could strike someone. Store all these in the proper place.

To store a flat or spare tire and tools:

1. Return the jack and tools as they were originally stored in the trunk.
2. Return the spare tire cover as it was in the trunk.
3. Install the retainer nut and turn it clockwise until tight.
4. Return the rear trunk carpet.
5. Place the flat tire face up on the load floor.

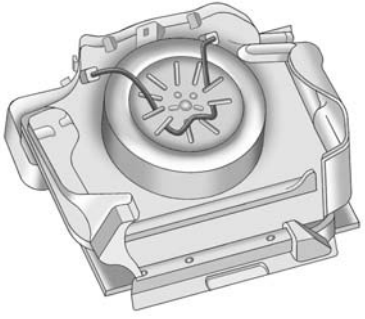

6. Route the strap provided, as shown, to secure the flat tire.

The compact spare tire is for temporary use only. Replace the compact spare with a full-size tire as soon as possible.

Compact Spare Tire

⚠ Warning

Driving with more than one compact spare tire at a time could result in loss of braking and handling. This could lead to a crash and you or others could be injured. Use only one compact spare tire at a time.

If this vehicle has a compact spare tire, it was fully inflated when new; however, it can lose air over time. Check the inflation pressure regularly. It should be 420 kPa (60 psi).

Stop as soon as possible and check that the spare tire is correctly inflated after being installed on the vehicle. The compact spare tire is designed for temporary use only. The vehicle will perform differently with the spare tire installed and it is recommended that the vehicle speed be limited to 80 km/h (50 mph). To conserve the tread of the spare tire, have the standard tire repaired or replaced as soon as convenient and return the spare tire to the storage area.

When using a compact spare tire, the ABS and Traction Control systems may engage until the spare tire is recognized by the vehicle, especially on slippery roads. Adjust driving to reduce possible wheel slip.

⚠ Caution

When the compact spare is installed, do not take the vehicle through an automatic car wash with guide rails. The compact spare can get caught on the rails which can damage the tire, wheel, and other parts of the vehicle.

Do not use the compact spare on other vehicles.

Do not mix the compact spare tire or wheel with other wheels or tires. They will not fit. Keep the spare tire and its wheel together.

⚠ Caution

Tire chains will not fit the compact spare. Using them can damage the vehicle and the chains. Do not use tire chains on the compact spare.

Jump Starting

For more information about the vehicle battery, see *Battery on page 10-41*.

If the battery has run down, try to use another vehicle and some jumper cables to start your vehicle. Be sure to use the following steps to do it safely.

⚠ Warning

Batteries can hurt you. They can be dangerous because:

- They contain acid that can burn you.
- They contain gas that can explode or ignite.
- They contain enough electricity to burn you.

If you do not follow these steps exactly, some or all of these things can hurt you.

⚠ Caution

Ignoring these steps could result in costly damage to the vehicle that would not be covered by the vehicle warranty. Trying to start the vehicle by pushing or pulling it will not work, and it could damage the vehicle.

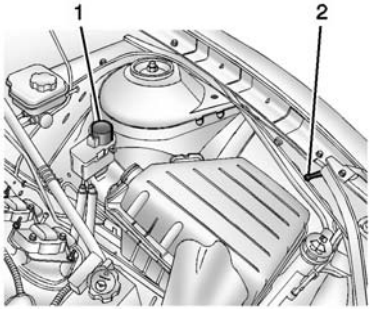

1. Remote Positve (+) Terminal
2. Remote Negative (-) Terminal

The jump start remote positive (1) and negative (2) terminals are in the engine compartment on the driver side of the vehicle.

These terminals are used instead of a direct connection to the battery.

The positive jump start connection is covered by a red cap. Remove to expose the terminal.

1. Check the other vehicle. It must have a 12-volt battery with a negative ground system.

⚠ Caution

If the other vehicle does not have a 12-volt system with a negative ground, both vehicles can be damaged. Only use a vehicle that has a 12-volt system with a negative ground for jump starting.

2. Position the two vehicles so that they are not touching.

3. Set the parking brake firmly. Vehicles with an automatic transmission should be in P (Park). See *Shifting Into Park on page 9-24*. Vehicles with a manual transmission should be in Neutral. See *Parking (Manual Transmission) on page 9-26*.

⚠ Caution

If any accessories are left on or plugged in during the jump starting procedure, they could be damaged. The repairs would not be covered by the vehicle warranty. Whenever possible, turn off or unplug all accessories on either vehicle when jump starting.

4. Turn the ignition to LOCK/OFF and switch off all lights and accessories in both vehicles, except the hazard warning flashers if needed.

⚠ Warning

An electric fan can start up even when the engine is not running and can injure you. Keep hands, clothing and tools away from any underhood electric fan.

⚠ Warning

Using a match near a battery can cause battery gas to explode. People have been hurt doing this, and some have been blinded. Use a flashlight if you need more light.

Be sure the battery has enough water. You do not need to add water to the battery installed in your new vehicle. But if a battery has filler caps, be sure the right amount of fluid is there. If it is low,

(Continued)

Warning (Continued)

add water to take care of that first. If you do not, explosive gas could be present.

Battery fluid contains acid that can burn you. Do not get it on you. If you accidentally get it in your eyes or on your skin, flush the place with water and get medical help immediately.

⚠ Warning

Fans or other moving engine parts can injure you badly. Keep your hands away from moving parts once the engine is running.

5. Connect one end of the red positive (+) cable to the jump start positive (+) post.
6. Connect the other end of the red positive (+) cable to the positive (+) terminal of the good battery.
7. Connect one end of the black negative (–) cable to the negative (–) terminal of the good battery.
8. Connect the other end of the black negative (–) cable to the negative (–) post.
9. Start the engine in the vehicle with the good battery and run the engine at idle speed for at least four minutes.
10. Try to start the vehicle that had the dead battery. If it will not start after a few tries, it probably needs service.

⚠ Caution

If the jumper cables are connected or removed in the wrong order, electrical shorting may occur and damage the vehicle. The repairs would not be covered by the vehicle warranty. Always connect and remove the jumper cables in the correct order, making sure that the cables do not touch each other or other metal.

Jumper Cable Removal

Reverse the sequence exactly when removing the jumper cables.

Towing the Vehicle

⚠ Caution

Incorrectly towing a disabled vehicle may cause damage. The damage would not be covered by the vehicle warranty.

Have the vehicle towed on a flatbed car carrier. A wheel lift tow truck could damage the vehicle.

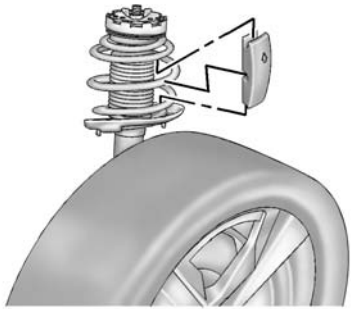

Due to low ramp angles on the ZL1 and Z/28, use care when loading the vehicle onto a flatbed carrier. Front spring spacers were provided for lifting the front suspension if more clearance is necessary when towing.

Consult your dealer or a professional towing service if the disabled vehicle must be towed.

To tow the vehicle behind another vehicle for recreational purposes, such as behind a motor home, see “Recreational Vehicle Towing” following.

Recreational Vehicle Towing

⚠ Caution

Dolly towing or dinghy towing the vehicle may cause damage because of reduced ground clearance. Always put the vehicle on a flatbed truck or trailer.

The vehicle was neither designed nor intended to be towed with any of its wheels on the ground. If the vehicle must be towed, see *Towing the Vehicle on page 10-99*.

Appearance Care

Exterior Care

Locks

Locks are lubricated at the factory. Use a de-icing agent only when absolutely necessary, and have the locks greased after using. See *Recommended Fluids and Lubricants on page 11-12*.

Washing the Vehicle

To preserve the vehicle's finish, wash it often and out of direct sunlight.

⚠ Caution

Do not use petroleum-based, acidic, or abrasive cleaning agents as they can damage the vehicle's paint, metal, or plastic parts. If damage occurs, it would not be covered by the vehicle warranty. Approved cleaning

(Continued)

Caution (Continued)

products can be obtained from your dealer. Follow all manufacturer directions regarding correct product usage, necessary safety precautions, and appropriate disposal of any vehicle care product.

⚠ Caution

Avoid using high-pressure washes closer than 30 cm (12 in) to the surface of the vehicle. Use of power washers exceeding 8,274 kPa (1,200 psi) can result in damage or removal of paint and decals.

This symbol is on any underhood compartment electrical center that should not be power washed. This could cause damage that would not be covered by the vehicle warranty.

⚠ Caution

Vehicles equipped with the 1LE, ZL1, or Z/28 package or any accessory ground effects package have reduced ground clearance. Damage can occur in automatic car washes, when approaching curbs, or on steep inclines. Do not use automatic car washes. Approach curbs and inclines with caution.

If using an automatic car wash, comply with the car wash instructions. The windshield wiper and rear window wiper, if equipped, must be off. Remove any accessories that may be damaged or interfere with the car wash equipment.

Rinse the vehicle well, before washing and after, to remove all cleaning agents completely. If they are allowed to dry on the surface, they could stain.

Dry the finish with a soft, clean chamois or an all-cotton towel to avoid surface scratches and water spotting.

Finish Care

Application of aftermarket clearcoat sealant/wax materials is not recommended. If painted surfaces are damaged, see your dealer to have the damage assessed and repaired. Foreign materials such as calcium chloride and other salts, ice melting agents, road oil and tar, tree sap, bird droppings, chemicals from industrial chimneys, etc., can damage the vehicle's finish if they remain on painted surfaces. Wash the vehicle as soon as possible. If necessary, use non-abrasive cleaners that are marked safe for painted surfaces to remove foreign matter.

Occasional hand waxing or mild polishing should be done to remove residue from the paint finish. See your dealer for approved cleaning products.

Do not apply waxes or polishes to uncoated plastic, vinyl, rubber, decals, simulated wood, or flat paint as damage can occur.

⚠ Caution

Machine compounding or aggressive polishing on a basecoat/clearcoat paint finish may damage it. Use only non-abrasive waxes and polishes that are made for a basecoat/clearcoat paint finish on the vehicle.

To keep the paint finish looking new, keep the vehicle garaged or covered whenever possible.

Protecting Exterior Bright Metal Moldings

⚠ Caution

Failure to clean and protect the bright metal moldings can result in a hazy white finish or pitting. This damage would not be covered by the vehicle warranty.

The bright metal moldings on the vehicle are aluminum. To prevent damage always follow these cleaning instructions:

- Be sure the molding is cool to the touch before applying any cleaning solution.
- Use a cleaning solution approved for aluminum. Some cleaners are highly acidic or contain alkaline substances and can damage the moldings.
- Always dilute a concentrated cleaner according to the manufacturer’s instructions.

- Do not use chrome cleaners.
- Do not use cleaners that are not intended for automotive use.
- Use a nonabrasive wax on the vehicle after washing to protect and extend the molding finish.

Hood Air Extractor

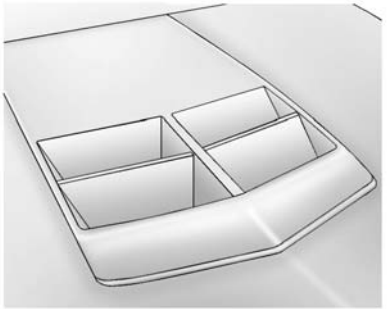

ZL1

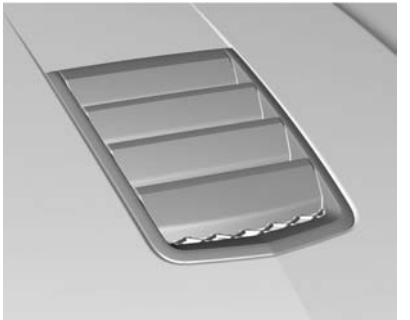

SS, 1LE Shown, Z/28 Similar

It is not recommended that the air extractor on the ZL1, SS, 1LE, and Z/28 Performance Packages be waxed, as it will change the gloss level of the surface. In addition, care must be used when waxing around the air extractor. If a small amount of wax is applied to the extractor it can create an irregular appearance in the surface of the panel. If wax, debris, or other materials create stains on the air extractor, see your dealer for the recommended cleaner.

The air extractor may have vent screens in the openings. Keep leaves or other debris out of the vent screens.

⚠ Caution

Pushing on the vent screens could damage them. Do not push on the screens when clearing.

There is a water deflector on the underside of the air extractor. Do not remove it.

Convertible Top Care

Frequently hand wash convertible tops with mild car wash soap. Never use a stiff brush, steam, bleach, or aggressive cleaners.
If necessary, a soft brush can be used to remove dirt. When finished cleaning, thoroughly rinse the fabric. Avoid automatic car washes with overhead brushes or very high pressure sprays as they can cause damage and leaking.

Only lower the top when it is completely dry and avoid leaving the top lowered for extended periods of time to prevent excessive interior weathering.

Avoid leaving large amounts of snow on the top for extended periods of time as damage may also occur.

Cleaning Exterior Lamps/ Lenses, Emblems, Decals and Stripes

Use only lukewarm or cold water, a soft cloth, and a car washing soap to clean exterior lamps, lenses, emblems, decals and stripes. Follow instructions under "Washing the Vehicle" previously in this section.

Lamp covers are made of plastic, and some have a UV protective coating. Do not clean or wipe them when dry.

Do not use any of the following on lamp covers:

- Abrasive or caustic agents.
- Washer fluids and other cleaning agents in higher concentrations than suggested by the manufacturer.
- Solvents, alcohols, fuels, or other harsh cleaners.
- Ice scrapers or other hard items.
- Aftermarket appearance caps or covers while the lamps are illuminated, due to excessive heat generated.

⚠ Caution

Failure to clean lamps properly can cause damage to the lamp cover that would not be covered by the vehicle warranty.

⚠ Caution

Using wax on low gloss black finish stripes can increase the gloss level and create a

(Continued)

Caution (Continued)

non-uniform finish. Clean low gloss stripes with soap and water only.

Air Intakes

Clear debris from the air intakes, between the hood and windshield, when washing the vehicle.

Windshield and Wiper Blades

Clean the outside of the windshield with glass cleaner.

Clean rubber blades using lint-free cloth or paper towel soaked with windshield washer fluid or a mild detergent. Wash the windshield thoroughly when cleaning the blades. Bugs, road grime, sap, and a buildup of vehicle wash/wax treatments may cause wiper streaking.

Replace the wiper blades if they are worn or damaged. Damage can be caused by extreme dusty conditions, sand, salt, heat, sun, snow, and ice.

Weatherstrips

Apply Dielectric silicone grease on weatherstrips to make them last longer, seal better, and not stick or squeak. Lubricate weatherstrips at least once a year. Hot, dry climates may require more frequent application. Black marks from rubber material on painted surfaces can be removed by rubbing with a clean cloth. See *Recommended Fluids and Lubricants on page 11-12*.

Tires

Use a stiff brush with tire cleaner to clean the tires.

⚠ Caution

Using petroleum-based tire dressing products on the vehicle may damage the paint finish and/or tires. When applying a tire dressing, always wipe off any overspray from all painted surfaces on the vehicle.

Wheels and Trim — Aluminum or Chrome

Use a soft, clean cloth with mild soap and water to clean the wheels. After rinsing thoroughly with clean water and dry with a soft, clean towel. A wax may then be applied.

⚠ Caution

Chrome wheels and other chrome trim may be damaged if the vehicle is not washed after driving on roads that have been sprayed with magnesium, calcium,

(Continued)

Caution (Continued)

or sodium chloride. These chlorides are used on roads for conditions such as ice and dust. Always wash the chrome with soap and water after exposure.

⚠ Caution

To avoid surface damage, do not use strong soaps, chemicals, abrasive polishes, cleaners, brushes, or cleaners that contain acid on aluminum or chrome-plated wheels. Use only approved cleaners. Also, never drive a vehicle with aluminum or chrome-plated wheels through an automatic car wash that uses silicone carbide tire cleaning brushes. Damage could occur and the repairs would not be covered by the vehicle warranty.

Steering, Suspension, and Chassis Components

Visually inspect steering, suspension, and chassis components for damaged, loose, or missing parts or signs of wear at least once a year.

Inspect power steering for proper hook-up, binding, leaks, cracks, chafing, etc.

Visually check constant velocity joint boots and axle seals for leaks.

Body Component Lubrication

Lubricate all key lock cylinders, hood hinges, liftgate hinges, and steel fuel door hinge unless the components are plastic. Applying silicone grease on weatherstrips with a clean cloth will make them last longer, seal better, and not stick or squeak.

Underbody Maintenance

At least twice a year, spring and fall use plain water to flush any corrosive materials from the underbody. Take care to thoroughly clean any areas where mud and other debris can collect.

Sheet Metal Damage

If the vehicle is damaged and requires sheet metal repair or replacement, make sure the body repair shop applies anti-corrosion material to parts repaired or replaced to restore corrosion protection.

Original manufacturer replacement parts will provide the corrosion protection while maintaining the vehicle warranty.

Finish Damage

Quickly repair minor chips and scratches with touch-up materials available from your dealer to avoid corrosion. Larger areas of finish damage can be corrected in your dealer's body and paint shop.

Chemical Paint Spotting

Airborne pollutants can fall upon and attack painted vehicle surfaces causing blotchy, ring-shaped discolorations, and small, irregular dark spots etched into the paint surface. See “Finish Care” previously in this section.

Interior Care

To prevent dirt particle abrasions, regularly clean the vehicle's interior. Immediately remove any soils. Note that newspapers or dark garments that can transfer color to home furnishings can also permanently transfer color to the vehicle's interior.

Use a soft bristle brush to remove dust from knobs and crevices on the instrument cluster. Using a mild soap solution, immediately remove hand lotions, sunscreen, and insect repellent from all interior surfaces or permanent damage may result.

Your dealer may have products for cleaning the interior. Use cleaners specifically designed for the surfaces being cleaned to prevent permanent damage. Apply all cleaners directly to the cleaning cloth. Do not spray cleaners directly on any switches or controls. Cleaners should be removed quickly. Never allow cleaners to remain on the surface being cleaned for extended periods of time.

Cleaners may contain solvents that can become concentrated in the interior. Before using cleaners, read and adhere to all safety instructions on the label. While cleaning the interior, maintain adequate ventilation by opening the doors and windows.

To prevent damage, do not clean the interior using the following cleaners or techniques:

- Never use a razor or any other sharp object to remove a soil from any interior surface.
- Never use a brush with stiff bristles.
- Never rub any surface aggressively or with excessive pressure.
- Do not use laundry detergents or dishwashing soaps with degreasers. For liquid cleaners, use approximately 20 drops per 3.8 L (1 gal) of water.
  A concentrated soap solution will leave a residue that creates streaks and attracts dirt. Do not use solutions that contain strong or caustic soap.
- Do not heavily saturate the upholstery when cleaning.
- Do not use solvents or cleaners containing solvents.

Interior Glass

To clean, use a terry cloth fabric dampened with water. Wipe droplets left behind with a clean dry cloth. Commercial glass cleaners may be used, if necessary, after cleaning the interior glass with plain water.

⚠ Caution

To prevent scratching, never use abrasive cleaners on automotive glass. Abrasive cleaners or aggressive cleaning may damage the rear window defogger.

Cleaning the windshield with water during the first three to six months of ownership will reduce tendency to fog.

Speaker Covers

Vacuum around a speaker cover gently, so that the speaker will not be damaged. Clean spots with just water and mild soap.

Coated Moldings

Coated moldings should be cleaned.

- When lightly soiled, wipe with a sponge or soft lint-free cloth dampened with water.
- When heavily soiled, use warm soapy water.

Fabric/Carpet/Suede

Start by vacuuming the surface using a soft brush attachment. If a rotating brush attachment is being used during vacuuming, only use it on the floor carpet. Before cleaning, gently remove as much of the soil as possible using one of the following techniques:

- Gently blot liquids with a paper towel. Continue blotting until no more soil can be removed.
- For solid soils, remove as much as possible prior to vacuuming.

To clean:

1. Saturate a clean lint-free colorfast cloth with water. Microfiber cloth is recommended to prevent lint transfer to the fabric or carpet.
2. Remove excess moisture by gently wringing until water does not drip from the cleaning cloth.
3. Start on the outside edge of the soil and gently rub toward the center. Fold the cleaning cloth to a clean area frequently to prevent forcing the soil in to the fabric.
4. Continue gently rubbing the soiled area until there is no longer any color transfer from the soil to the cleaning cloth.
5. If the soil is not completely removed, use a mild soap solution followed only by plain water.

If the soil is not completely removed, it may be necessary to use a commercial upholstery cleaner or spot lifter. Test a small hidden area for colorfastness before using a commercial upholstery cleaner or spot lifter. If ring formation occurs, clean the entire fabric or carpet.

Following the cleaning process, a paper towel can be used to blot excess moisture.

Cleaning High Gloss Surfaces and Vehicle Information and Radio Displays

For vehicles with high gloss surfaces or vehicle displays, use a microfiber cloth to wipe surfaces. Before wiping the surface with the microfiber cloth, use a soft bristle brush to remove dirt that could scratch the surface. Then use the microfiber cloth by gently rubbing to clean. Never use window cleaners or solvents. Periodically hand wash the microfiber cloth separately, using mild soap. Do not use bleach or fabric softener. Rinse thoroughly and air dry before next use.

⚠ Caution

Do not attach a device with a suction cup to the display. This may cause damage and would not be covered by the warranty.

Instrument Panel, Leather, Vinyl, Other Plastic Surfaces, Low Gloss Paint Surfaces and Natural Open Pore Wood Surfaces

Use a soft microfiber cloth dampened with water to remove dust and loose dirt. For a more thorough cleaning, use a soft microfiber cloth dampened with a mild soap solution.

⚠ Caution

Soaking or saturating leather, especially perforated leather, as well as other interior surfaces, may cause permanent damage. Wipe excess moisture from these surfaces after cleaning and allow them to dry naturally. Never use heat, steam, spot lifters, or spot removers. Do not use cleaners that contain silicone or wax-based products. Cleaners containing

(Continued)

Caution (Continued)

these solvents can permanently change the appearance and feel of leather or soft trim and are not recommended.

Do not use cleaners that increase gloss, especially on the instrument panel. Reflected glare can decrease visibility through the windshield under certain conditions.

⚠ Caution

Use of air fresheners may cause permanent damage to plastics and painted surfaces. If an air freshener comes in contact with any plastic or painted surface in the vehicle, blot immediately and clean with a soft cloth dampened with a mild soap solution. Damage caused by air fresheners would not be covered by the vehicle warranty.

Cargo Cover and Convenience Net

Wash with warm water and mild detergent. Do not use chlorine bleach. Rinse with cold water, and then dry completely.

Care of Safety Belts

Keep belts clean and dry.

⚠ Warning

Do not bleach or dye safety belts. It may severely weaken them. In a crash, they might not be able to provide adequate protection. Clean safety belts only with mild soap and lukewarm water.

Floor Mats

⚠ Warning

If a floor mat is the wrong size or is not properly installed, it can interfere with the pedals. Interference with the pedals can cause unintended acceleration and/or increased stopping distance which can cause a crash and injury. Make sure the floor mat does not interfere with the pedals.

Use the following guidelines for proper floor mat usage.

- The original equipment floor mats were designed for your vehicle. If the floor mats need replacing, it is recommended that GM certified floor mats be purchased. Non-GM floor mats may not fit properly and may interefere with the pedals. Always check that the floor mats do not interfere with the pedals.
- Use the floor mat with the correct side up. Do not turn it over.
- Do not place anything on top of the driver side floor mat.
- Use only a single floor mat on the driver side.
- Do not place one floor mat on top of another.

Both floor mats are held in place by two hook-type retainers.

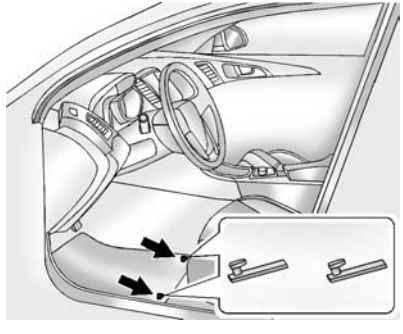

Removing and Replacing the Floor Mats

1. Pull up on the rear of the mat to remove it from the hooks.
2. Reinstall by lining up the floor mat retainer openings over the carpet retainers and hook into position.
3. Make sure the floor mat is properly secured and verify that it does not interfere with the pedals.

✍ NOTES

Service and Maintenance

General Information
General Information 11-1

Maintenance Schedule
Maintenance Schedule 11-2

Special Application Services
Special Application Services 11-8

Additional Maintenance and Care
Additional Maintenance and Care 11-9

Recommended Fluids, Lubricants, and Parts
Recommended Fluids and Lubricants 11-12
Maintenance Replacement Parts 11-14

Maintenance Records
Maintenance Records 11-16

General Information

Your vehicle is an important investment. This section describes the required maintenance for the vehicle. Follow this schedule to help protect against major repair expenses resulting from neglect or inadequate maintenance. It may also help to maintain the value of the vehicle if it is sold. It is the responsibility of the owner to have all required maintenance performed.

Your dealer has trained technicians who can perform required maintenance using genuine replacement parts. They have up-to-date tools and equipment for fast and accurate diagnostics. Many dealers have extended evening and Saturday hours, courtesy transportation, and online scheduling to assist with service needs.

Your dealer recognizes the importance of providing competitively priced maintenance and repair services. With trained technicians, the dealer is the place for routine maintenance such as oil changes and tire rotations and additional maintenance items like tires, brakes, batteries, and wiper blades.

⚠ Caution

Damage caused by improper maintenance can lead to costly repairs and may not be covered by the vehicle warranty. Maintenance intervals, checks, inspections, recommended fluids, and lubricants are important to keep the vehicle in good working condition.

The Tire Rotation and Required Services are the responsibility of the vehicle owner. It is recommended to have your dealer perform these services every 12 000 km/7,500 mi. Proper vehicle maintenance helps to keep the vehicle in good working condition, improves fuel economy, and reduces vehicle emissions.

Because of the way people use vehicles, maintenance needs vary. There may need to be more frequent checks and services. The Additional Required Services - Normal are for vehicles that:

- Carry passengers and cargo within recommended limits on the Tire and Loading Information label. See *Vehicle Load Limits on page 9-14*.
- Are driven on reasonable road surfaces within legal driving limits.
- Use the recommended fuel. See *Fuel on page 9-51*.

Refer to the information in the Maintenance Schedule Additional Required Services - Normal chart.

The Additional Required Services - Severe are for vehicles that are:

- Mainly driven in heavy city traffic in hot weather.
- Mainly driven in hilly or mountainous terrain.
- Frequently towing a trailer.
- Used for high speed or competitive driving.
- Used for taxi, police, or delivery service.

Refer to the information in the Maintenance Schedule Additional Required Services - Severe chart.

⚠ Warning

Performing maintenance work can be dangerous and can cause serious injury. Perform maintenance work only if the required information, proper tools, and equipment are available.
If they are not, see your dealer to have a trained technician do the work. See *Doing Your Own Service Work on page 10-4*.

Maintenance Schedule

Owner Checks and Services

At Each Fuel Stop

- Check the engine oil level. See *Engine Oil on page 10-15*.

Once a Month

- Check the tire inflation pressures. See *Tire Pressure on page 10-65*.
- Inspect the tires for wear. See *Tire Inspection on page 10-71*.
- Check the windshield washer fluid level. See *Washer Fluid on page 10-37*.

Engine Oil Change

When the CHANGE ENGINE OIL SOON message displays, have the engine oil and filter changed within the next 1 000 km/600 mi. If driven under the best conditions, the engine oil life system might not indicate the need for vehicle service

for up to one year. The engine oil and filter must be changed at least once a year and the oil life system must be reset. Your trained dealer technician can perform this work. If the engine oil life system is reset accidentally, service the vehicle within 5 000 km/3,000 mi since the last service. Reset the oil life system when the oil is changed. See *Engine Oil Life System on page 10-19*.

Tire Rotation and Required Services Every 12 000 km/ 7,500 mi

Rotate the tires, if recommended for the vehicle, and perform the following services. See *Tire Rotation on page 10-71*.

- Check engine oil level and oil life percentage. If needed, change engine oil and filter, and reset oil life system. See *Engine Oil on page 10-15* and *Engine Oil Life System on page 10-19*.
- Check engine coolant level. See *Engine Coolant on page 10-30*.
- Check windshield washer fluid level. See *Washer Fluid on page 10-37*.
- Visually inspect windshield wiper blades for wear, cracking, or contamination. See *Exterior Care on page 10-100*. Replace worn or damaged wiper blades. See *Wiper Blade Replacement on page 10-43*.
- Check tire inflation pressures. See *Tire Pressure on page 10-65*.
- Inspect tire wear. See *Tire Inspection on page 10-71*.
- Visually check for fluid leaks.
- Inspect engine air cleaner filter. See *Engine Air Cleaner/Filter (Except ZL1 and Z/28)) on page 10-21* or *Engine Air Cleaner/Filter (ZL1 Only) on page 10-23* or *Engine Air Cleaner/Filter (Z/28 Only) on page 10-24*.
- Inspect brake system.
- Visually inspect steering, suspension, and chassis components for damaged, loose, or missing parts or signs of wear. See *Exterior Care on page 10-100*.
- Check restraint system components. See *Safety System Check on page 3-14*.
- Visually inspect fuel system for damage or leaks.
- Visually inspect exhaust system and nearby heat shields for loose or damaged parts.
- Lubricate body components. See *Exterior Care on page 10-100*.
- Check starter switch. See *Starter Switch Check on page 10-41*.
- Check automatic transmission shift lock control function. See *Automatic Transmission Shift Lock Control Function Check on page 10-42*.

- Check ignition transmission lock. See *Ignition Transmission Lock Check on page 10-42*.
- Check parking brake and automatic transmission park mechanism. See *Park Brake and P (Park) Mechanism Check on page 10-43*.
- Check accelerator pedal for damage, high effort, or binding. Replace if needed.
- Visually inspect gas strut for signs of wear, cracks, or other damage. Check the hold open ability of the strut. See your dealer if service is required.
- Check tire sealant expiration date, if equipped. See *Tire Sealant and Compressor Kit on page 10-81*.
- Inspect sunroof track and seal, if equipped. See *Sunroof on page 2-17*.

Maintenance Schedule Additional Required Services - Normal	12 000 km/7,500 mi	24 000 km/15,000 mi	36 000 km/22,500 mi	48 000 km/30,000 mi	60 000 km/37,500 mi	72 000 km/45,000 mi	84 000 km/52,500 mi	96 000 km/60,000 mi	108 000 km/67,500 mi	120 000 km/75,000 mi	132 000 km/82,500 mi	144 000 km/90,000 mi	156 000 km/97,500 mi	168 000 km/105,000 mi	180 000 km/112,500 mi	192 000 km/120,000 mi	204 000 km/127,500 mi	216 000 km/135,000 mi	228 000 km/142,500 mi	240 000 km/150,000 mi
Rotate tires and perform Required Services. Check engine oil level and oil life percentage. Change engine oil and filter, if needed.	✓	✓	✓	✓	✓	✓	✓	✓	✓	✓	✓	✓	✓	✓	✓	✓	✓	✓	✓	✓
Replace passenger compartment air filter. (1)			✓			✓			✓			✓			✓			✓		
Inspect evaporative control system. (2)						✓						✓						✓		
Except ZL1, Z/28: Replace engine air cleaner filter. (3)						✓						✓						✓		
ZL1, Z/28 Only: Replace engine air cleaner filter.		✓		✓		✓		✓		✓		✓		✓		✓		✓		✓
Except ZL1: Replace spark plugs. Inspect spark plug wires.													✓							
ZL1 Only: Replace spark plugs. Inspect spark plug wires.								✓								✓				
Drain and fill engine cooling system. (4)																				✓
Visually inspect accessory drive belts. (5)																				✓
Replace rear axle fluid, if equipped with limited slip differential.						✓						✓						✓		
Replace brake fluid. (6)																				✓
Replace clutch fluid. (6)																				✓

Footnotes — Maintenance Schedule Additional Required Services - Normal

(1) Or every two years, whichever comes first. More frequent replacement may be needed if the vehicle is driven in areas with heavy traffic, areas with poor air quality, or areas with high dust levels. Replacement may also be needed if there is a reduction in air flow, excessive window fogging, or odors.

(2) Check all fuel and vapor lines and hoses for proper hook-up, routing, and condition.

(3) Or every four years, whichever comes first.

(4) Or every five years, whichever comes first. See *Cooling System (Except ZL1 and Z/28 Engines) on page 10-25* or *Cooling System (ZL1 Engine Only) on page 10-27* or *Cooling System (Intercooler) on page 10-28* or *Cooling System (Z/28 Engine Only) on page 10-29*.

(5) Or every 10 years, whichever comes first. Inspect for fraying, excessive cracking, or damage; replace, if needed.

(6) Or every 10 years, whichever comes first.

Maintenance Schedule Additional Required Services - Severe	12 000 km/7,500 mi	24 000 km/15,000 mi	36 000 km/22,500 mi	48 000 km/30,000 mi	60 000 km/37,500 mi	72 000 km/45,000 mi	84 000 km/52,500 mi	96 000 km/60,000 mi	108 000 km/67,500 mi	120 000 km/75,000 mi	132 000 km/82,500 mi	144 000 km/90,000 mi	156 000 km/97,500 mi	168 000 km/105,000 mi	180 000 km/112,500 mi	192 000 km/120,000 mi	204 000 km/127,500 mi	216 000 km/135,000 mi	228 000 km/142,500 mi	240 000 km/150,000 mi
Rotate tires and perform Required Services. Check engine oil level and oil life percentage. Change engine oil and filter, if needed.	✓	✓	✓	✓	✓	✓	✓	✓	✓	✓	✓	✓	✓	✓	✓	✓	✓	✓	✓	✓
Replace passenger compartment air filter. (1)			✓			✓			✓			✓			✓			✓		
Inspect evaporative control system. (2)						✓						✓						✓		
Except ZL1, Z/28: Replace engine air cleaner filter. (3)						✓						✓						✓		
ZL1, Z/28 Only: Replace engine air cleaner filter.		✓		✓		✓		✓		✓		✓		✓		✓		✓		✓
Change automatic transmission fluid and filter.						✓						✓						✓		
Change manual transmission fluid.						✓						✓						✓		
Except ZL1: Replace spark plugs. Inspect spark plug wires.													✓							
ZL1 Only: Replace spark plugs. Inspect spark plug wires.								✓								✓				
Drain and fill engine cooling system. (4)																				✓
Visually inspect accessory drive belts. (5)																				✓
Replace rear axle fluid.						✓						✓						✓		
Replace brake fluid. (6)																				✓
Replace clutch fluid. (6)																				✓

Footnotes — Maintenance Schedule Additional Required Services - Severe

(1) Or every two years, whichever comes first. More frequent replacement may be needed if the vehicle is driven in areas with heavy traffic, areas with poor air quality, or areas with high dust levels. Replacement may also be needed if there is a reduction in air flow, excessive window fogging, or odors.

(2) Check all fuel and vapor lines and hoses for proper hook-up, routing, and condition.

(3) Or every four years, whichever comes first.

(4) Or every five years, whichever comes first. See *Cooling System (Except ZL1 and Z/28 Engines) on page 10-25* or *Cooling System (ZL1 Engine Only) on page 10-27* or *Cooling System (Intercooler) on page 10-28* or *Cooling System (Z/28 Engine Only) on page 10-29*.

(5) Or every 10 years, whichever comes first. Inspect for fraying, excessive cracking, or damage; replace, if needed.

(6) Or every 10 years, whichever comes first.

Special Application Services

- Severe Commercial Use Vehicles Only: Lubricate chassis components every 5 000 km/ 3,000 mi.
- Have underbody flushing service performed. See "Underbody Maintenance" in *Exterior Care on page 10-100*.

Additional Maintenance and Care

Your vehicle is an important investment and caring for it properly may help to avoid future costly repairs. To maintain vehicle performance, additional maintenance services may be required.

It is recommended that your dealer perform these services — their trained dealer technicians know your vehicle best. Your dealer can also perform a thorough assessment with a multi-point inspection to recommend when your vehicle may need attention.

The following list is intended to explain the services and conditions to look for that may indicate services are required.

Battery

The battery supplies power to start the engine and operate any additional electrical accessories.

- To avoid break-down or failure to start the vehicle, maintain a battery with full cranking power.
- Trained dealer technicians have the diagnostic equipment to test the battery and ensure that the connections and cables are corrosion-free.

Belts

- Belts may need replacing if they squeak or show signs of cracking or splitting.
- Trained dealer technicians have access to tools and equipment to inspect the belts and recommend adjustment or replacement when necessary.

Brakes

Brakes stop the vehicle and are crucial to safe driving.

- Signs of brake wear may include chirping, grinding, or squealing noises, or difficulty stopping.
- Trained dealer technicians have access to tools and equipment to inspect the brakes and recommend quality parts engineered for the vehicle.

Fluids

Proper fluid levels and approved fluids protect the vehicle's systems and components. See *Recommended Fluids and Lubricants on page 11-12* for GM approved fluids.

- Engine oil and windshield washer fluid levels should be checked at every fuel fill.
- Instrument cluster lights may come on to indicate that fluids may be low and need to be filled.

Hoses

Hoses transport fluids and should be regularly inspected to ensure that there are no cracks or leaks. With a multi-point inspection, your dealer can inspect the hoses and advise if replacement is needed.

Lamps

Properly working headlamps, taillamps, and brake lamps are important to see and be seen on the road.

- Signs that the headlamps need attention include dimming, failure to light, cracking, or damage. The brake lamps need to be checked periodically to ensure that they light when braking.
- With a multi-point inspection, your dealer can check the lamps and note any concerns.

Shocks and Struts

Shocks and struts help aid in control for a smoother ride.

- Signs of wear may include steering wheel vibration, bounce/sway while braking, longer stopping distance, or uneven tire wear.
- As part of the multi-point inspection, trained dealer technicians can visually inspect the shocks and struts for signs of leaking, blown seals, or damage, and can advise when service is needed.

Tires

Tires need to be properly inflated, rotated, and balanced. Maintaining the tires can save money and fuel, and can reduce the risk of tire failure.

- Signs that the tires need to be replaced include three or more visible treadwear indicators; cord or fabric showing through the rubber; cracks or cuts in the tread or sidewall; or a bulge or split in the tire.
- Trained dealer technicians can inspect and recommend the right tires. Your dealer can also provide tire/wheel balancing services to ensure smooth vehicle operation at all speeds. Your dealer sells and services name brand tires.

Vehicle Care

To help keep the vehicle looking like new, vehicle care products are available from your dealer. For information on how to clean and protect the vehicle's interior and exterior, see *Interior Care on page 10-105* and *Exterior Care on page 10-100*.

Wheel Alignment

Wheel alignment is critical for ensuring that the tires deliver optimal wear and performance.

- Signs that the alignment may need to be adjusted include pulling, improper vehicle handling, or unusual tire wear.
- Your dealer has the required equipment to ensure proper wheel alignment.

Windshield

For safety, appearance, and the best viewing, keep the windshield clean and clear.

- Signs of damage include scratches, cracks, and chips.
- Trained dealer technicians can inspect the windshield and recommend proper replacement if needed.

Wiper Blades

Wiper blades need to be cleaned and kept in good condition to provide a clear view.

- Signs of wear include streaking, skipping across the windshield, and worn or split rubber.
- Trained dealer technicians can check the wiper blades and replace them when needed.

Recommended Fluids, Lubricants, and Parts

Recommended Fluids and Lubricants

Usage	Fluid/Lubricant
Engine Oil	Use only engine oil licensed to the dexos1® specification of the proper SAE viscosity grade. ACDelco dexos1 Synthetic Blend is recommended. See *Engine Oil on page 10-15*.
Engine Coolant	50/50 mixture of clean, drinkable water and use only DEX-COOL® Coolant. See *Engine Coolant on page 10-30*.
Hydraulic Brake System	DOT 3 Hydraulic Brake Fluid (GM Part No. 19299818, in Canada 19299819).
Windshield Washer	Automotive windshield washer fluid that meets regional freeze protection requirements.
Hydraulic Clutch System	DOT 3 Hydraulic Brake Fluid (GM Part No. 19299818, in Canada 19299819).
Hydraulic Power Steering System	GM Power Steering Fluid (GM Part No. U.S. 89020661, in Canada 89021186).
Parking Brake Cable Guides	Chassis Lubricant (GM Part No. 12377985, in Canada 88901242) or lubricant meeting requirements of NLGI #2, Category LB or GC-LB.
Automatic Transmission	DEXRON®-VI Automatic Transmission Fluid.

Usage	Fluid/Lubricant
Manual Transmission (V6 Engine)	SAE 75W-90 GL5 Gear Oil (GM Part No. 88862475, in Canada 88862476).
Manual Transmission (V8 Engine)	Manual Transmission Fluid (GM Part No. 88861800, in Canada 88861801).
Rear Axle (V6 Engine with Automatic Transmission)	Rear Differential Fluid 75W-90 (GM Part No. 88900401, in Canada 89021678).
Rear Axle (V6 Engine with Manual Transmission)	Rear Differential Fluid 75W-90 Limited Slip (GM Part No. 88900401 and Limited Slip Additive 88900330, in Canada 89021678 and Limited Slip Additive 00992694).
Rear Axle (V8 Except ZL1 and Z/28)	Rear Differential Fluid 75W-90 Limited Slip (GM Part No. 88900401, in Canada 89021678). Add Limited Slip Additive GM Part No. 88900330, in Canada 00992694
Rear Axle (ZL1)	Rear Differential Fluid Dexron LS Gear 75W-90 (GM Part No. 88862624, in Canada 88862625).
Rear Axle (Z/28)	Rear Differential Fluid 75W-90 Limited Slip (GM Part No. 88900401, in Canada 89021678).
Key Lock Cylinders	Multi-Purpose Lubricant, Superlube (GM Part No. 12346241, in Canada 10953474).
Hood Latch Assembly, Secondary Latch, Pivots, Spring Anchor, and Release Pawl	Lubriplate Lubricant Aerosol (GM Part No. 89021668, in Canada 89021674) or lubricant meeting requirements of NLGI #2, Category LB or GC-LB.

Usage	Fluid/Lubricant
Hood and Door Hinges	Multi-Purpose Lubricant, Superlube (GM Part No. 12346241, in Canada 10953474).
Weatherstrip Conditioning	Weatherstrip Lubricant (GM Part No. 3634770, in Canada 10953518) or Dielectric Silicone Grease (GM Part No. 12345579, in Canada 10953481).

Maintenance Replacement Parts

Replacement parts identified below by name, part number, or specification can be obtained from your dealer.

Part	GM Part Number	ACDelco Part Number
Engine Air Cleaner/Filter (except ZL1 or Z/28)	92196275	A3137C
Engine Air Cleaner/Filter (ZL1)	23116124	A3177C
Engine Air Cleaner/Filter (Z/28)	23164564	A3194C
Engine Oil Filter		
3.6L V6 Engine	25177917	PF2129
6.2L V8 Engine	89017524	PF48
7.0L V8 Engine	12626224	UPF–48R
Passenger Compartment Air Filter	92234714	CF178

Part	GM Part Number	ACDelco Part Number
Spark Plugs		
3.6L V6 Engine	12622561	41-109
6.2L V8 Engine (L99 or LS3)	12621258	41-110
6.2L V8 Engine (LSA)	12571165	41-104
7.0L V8 Engine (LS7)	12571165	41-104
Wiper Blades		
Driver Side	92231676	—
Passenger Side	92231677	—

Maintenance Records

After the scheduled services are performed, record the date, odometer reading, who performed the service, and the type of services performed in the boxes provided. Retain all maintenance receipts.

Date	Odometer Reading	Serviced By	Services Performed

Date	Odometer Reading	Serviced By	Services Performed

Date	Odometer Reading	Serviced By	Services Performed

Technical Data

Vehicle Identification
Vehicle Identification Number (VIN) 12-1
Service Parts Identification Label 12-1

Vehicle Data
Capacities and Specifications 12-2
Engine Drive Belt Routing . . . 12-5

Vehicle Identification

Vehicle Identification Number (VIN)

This legal identifier is in the front corner of the instrument panel, on the left side of the vehicle. It can be seen through the windshield from outside. The VIN also appears on the Vehicle Certification and Service Parts labels and certificates of title and registration.

Engine Identification

The eighth character in the VIN is the engine code. This code identifies the vehicle's engine, specifications, and replacement parts. See “Engine Specifications” under *Capacities and Specifications on page 12-2* for the vehicle's engine code.

Service Parts Identification Label

This label, in the trunk, has the following information:

- Vehicle Identification Number (VIN).
- Model designation.
- Paint information.
- Production options and special equipment.

Do not remove this label from the vehicle.

Vehicle Data

Capacities and Specifications

Application	Capacities	
	Metric	English
Air Conditioning Refrigerant	For the air conditioning system refrigerant type and charge amount, see the refrigerant label under the hood. See your dealer for more information.	
Engine Cooling System		
3.6L V6 Engine (LFX) Automatic Transmission	10.2 L	10.8 qt
3.6L V6 Engine (LFX) Manual Transmission	10.6 L	11.2 qt
6.2L V8 Engine (L99) Automatic Transmission	10.9 L	11.5 qt
6.2L V8 Engine (LS3) Manual Transmission	10.9 L	11.5 qt
6.2L V8 Engine (LSA)	10.9 L	11.5 qt
7.0L V8 Engine (LS7)	12.0 L	12.7 qt
Cooling System — Intercooler (ZL1)	2.3 L	2.4 qt
Engine Oil with Filter		
3.6L V6 Engine	5.7 L	6.0 qt
6.2L V8 Engine	7.6 L	8.0 qt

Application	Capacities	
	Metric	English
7.0L V8 Engine	9.5 L	10.0 qt
Fuel Tank	71.0 L	18.8 gal
Rear Axle Fluid		
V6 Engine 6–Speed Automatic	0.9 L	1.0 qt
V6 Engine 6–Speed Manual*	0.9 L	1.0 qt
V8 Engine* (L99, LS3, or LS7)	0.9 L	1.0 qt
V8 Engine (LSA)	2.0 L	2.1 qt
Transmission Fluid		
Automatic — V6 and V8 (Pan Removal and Filter Replacement)**	6.3 L	6.7 qt
V6 Engine 6–Speed Manual	1.8 L	1.9 qt
V8 Engine SS 6–Speed Manual	3.9 L	4.2 qt
V8 Engine Z/28 6–Speed Manual	4.3 L	4.5 qt
V8 Engine ZL1 6–Speed Manual	4.4 L	4.6 qt
Wheel Nut Torque	150 N•m	110 lb ft

Application	Capacities	
	Metric	English
*Add 3.3 oz. (98 mL) of friction modifier to the specified quantity of axle lubricant.		
**See *Automatic Transmission Fluid on page 10-20* for information on checking fluid level.		
All capacities are approximate. When adding, be sure to fill to the approximate level, as recommended in this manual. Recheck fluid level after filling.		

Engine Specifications

Engine	VIN Code	Transmission	Spark Plug Gap
3.6L V6 (LFX)	3	Automatic Manual	0.95–1.10 mm (0.037–0.043 in)
6.2L V8 (L99)	J	Automatic	0.95–1.10 mm (0.037–0.043 in)
6.2L V8 (LS3)	W	Manual	0.95–1.10 mm (0.037–0.043 in)
6.2L V8 (LSA)	P	Automatic Manual	0.95–1.10 mm (0.037–0.043 in)
7.0L V8 (LS7)	E	Manual	0.95–1.10 mm (0.037–0.043 in)

Engine Drive Belt Routing

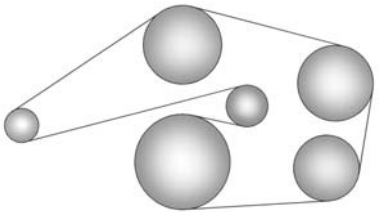

3.6L V6 Engine

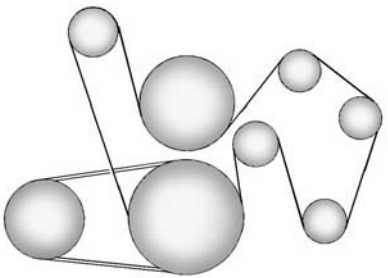

6.2L V8 Engines (L99 or LS3)

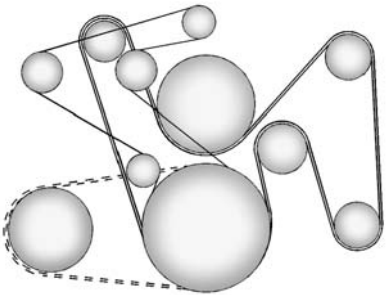

6.2L V8 Engine (LSA)

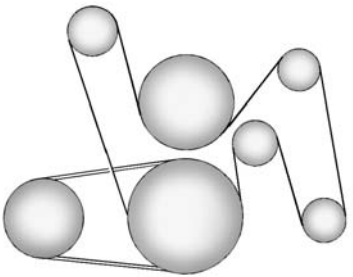

7.0L V8 Engine (LS7)

✍ NOTES

Customer Information

Customer Information
Customer Satisfaction Procedure 13-1
Customer Assistance Offices 13-3
Customer Assistance for Text Telephone (TTY) Users 13-4
Online Owner Center 13-4
GM Mobility Reimbursement Program 13-5
Roadside Assistance Program 13-5
Scheduling Service Appointments 13-7
Courtesy Transportation Program 13-7
Collision Damage Repair 13-8
Service Publications Ordering Information 13-11
Radio Frequency Identification (RFID) 13-12
Radio Frequency Statement 13-12

Reporting Safety Defects
Reporting Safety Defects to the United States Government 13-12
Reporting Safety Defects to the Canadian Government 13-13
Reporting Safety Defects to General Motors 13-13

Vehicle Data Recording and Privacy
Vehicle Data Recording and Privacy 13-14
Event Data Recorders 13-14
OnStar® 13-15
Infotainment System 13-15

Customer Information

Customer Satisfaction Procedure

Your satisfaction and goodwill are important to your dealer and to Chevrolet. Normally, any concerns with the sales transaction or the operation of the vehicle will be resolved by your dealer's sales or service departments. Sometimes, however, despite the best intentions of all concerned, misunderstandings can occur. If your concern has not been resolved to your satisfaction, the following steps should be taken:

STEP ONE: Discuss your concern with a member of dealership management. Normally, concerns can be quickly resolved at that level. If the matter has already been reviewed with the sales, service, or parts manager, contact the owner of your dealership or the general manager.

STEP TWO: If after contacting a member of dealership management, it appears your concern cannot be resolved by your dealership without further help, in the U.S., call the Chevrolet Customer Assistance Center at 1-800-222-1020. In Canada, call General Motors of Canada Customer Care Centre at 1-800-263-3777 (English), or 1-800-263-7854 (French).

We encourage you to call the toll-free number in order to give your inquiry prompt attention. Have the following information available to give the Customer Assistance representative:

- Vehicle Identification Number (VIN). This is available from the vehicle registration or title, or the plate at the top left of the instrument panel and visible through the windshield.
- Dealership name and location.
- Vehicle delivery date and present mileage.

When contacting Chevrolet, remember that your concern will likely be resolved at a dealer's facility. That is why we suggest following Step One first.

STEP THREE — U.S. Owners: Both General Motors and your dealer are committed to making sure you are completely satisfied with your new vehicle. However, if you continue to remain unsatisfied after following the procedure outlined in Steps One and Two, you can file with the Better Business Bureau (BBB) Auto Line® Program to enforce your rights.

The BBB Auto Line Program is an out-of-court program administered by the Council of Better Business Bureaus to settle automotive disputes regarding vehicle repairs or the interpretation of the New Vehicle Limited Warranty. Although you may be required to resort to this informal dispute resolution program prior to filing a court action, use of the program is free of charge and your case will generally be heard within 40 days. If you do not agree with the decision given in your case, you may reject it and proceed with any other venue for relief available to you.

You may contact the BBB Auto Line Program using the toll-free telephone number or write them at the following address:

BBB Auto Line Program
Council of Better Business Bureaus, Inc.
4200 Wilson Boulevard
Suite 800
Arlington , VA 22203-1838

Telephone: 1-800-955-5100
www.dr.bbb.org/goauto

This program is available in all 50 states and the District of Columbia. Eligibility is limited by vehicle age, mileage, and other factors. General Motors reserves the right to change eligibility limitations and/or discontinue its participation in this program.

STEP THREE — Canadian Owners: In the event that you do not feel your concerns have been addressed after following the procedure outlined in Steps One and Two, General Motors of Canada Limited wants you to be aware of its participation in a no-charge Mediation/Arbitration Program. General Motors of Canada Limited has committed to binding arbitration of owner disputes involving factory-related vehicle service claims. The program provides for the review of the facts involved by an impartial third party arbiter, and may include an informal hearing before the arbiter. The program is designed so that the entire dispute settlement process, from the time you file your complaint to the final decision, should be completed in about 70 days. We believe our impartial program offers advantages over courts in most jurisdictions because it is informal, quick, and free of charge.

For further information concerning eligibility in the Canadian Motor Vehicle Arbitration Plan (CAMVAP), call toll-free 1-800-207-0685, or call the General Motors Customer Care Centre, 1-800-263-3777 (English), 1-800-263-7854 (French), or write to:

The Mediation/Arbitration Program
c/o Customer Care Centre
General Motors of Canada Limited
Mail Code: CA1-163-005
1908 Colonel Sam Drive
Oshawa , Ontario L1H 8P7

Your inquiry should be accompanied by the Vehicle Identification Number (VIN).

Customer Assistance Offices

Chevrolet encourages customers to call the toll-free number for assistance. However, if a customer wishes to write or e-mail Chevrolet, the letter should be addressed to:

United States and Puerto Rico

Chevrolet Motor Division
Chevrolet Customer Assistance Center
P.O. Box 33170
Detroit, MI 48232-5170
www.Chevrolet.com

1-800-222-1020
1-800-833-2438 (For Text Telephone Devices (TTYs))
Roadside Assistance:
1-800-243-8872

From U.S. Virgin Islands:

1-800-496-9994

Canada

General Motors of Canada Limited
Customer Care Centre, Mail Code: CA1-163-005
1908 Colonel Sam Drive
Oshawa, Ontario L1H 8P7
www.gm.ca

1-800-263-3777 (English)
1-800-263-7854 (French)
1-800-263-3830 (For Text Telephone devices (TTYs))
Roadside Assistance:
1-800-268-6800

Overseas

Please contact the local General Motors Business Unit.

Customer Assistance for Text Telephone (TTY) Users

To assist customers who are deaf, hard of hearing, or speech-impaired and who use Text Telephones (TTYs), Chevrolet has TTY equipment available at its Customer Assistance Center. Any TTY user in the U.S. can communicate with Chevrolet by dialing: 1-800-833-2438. TTY users in Canada can dial 1-800-263-3830.

Online Owner Center

Online Owner Experience (U.S.) my.chevrolet.com

The Chevrolet online owner experience is a one-stop resource that allows interaction with Chevrolet and keeps important vehicle-specific information in one place.

Membership Benefits

(Vehicle Information): Download owner manuals and view vehicle-specific how-to videos.

(Maintenance Information): View maintenance schedules, alerts, OnStar onboard vehicle diagnostic information, and schedule service appointments.

(Service History): View and print dealer-recorded service records and self-recorded service records.

(Preferred Dealer Information): Select a preferred dealer and view dealer location, maps, phone numbers, and hours.

(Warranty Tracking Information): Track the vehicle's warranty information.

(Recall Information): View active recalls by Vehicle Identification Number (VIN). See *Vehicle Identification Number (VIN) on page 12-1*.

(Other Account Information): View GM Card, SiriusXM Satellite radio (if equipped), and OnStar account information.

(Live Chat Support): Chat live with online help representatives.

Visit my.chevrolet.com to register your vehicle.

Chevrolet Owner Centre (Canada) chevroletowner.ca

Take a trip to the Chevrolet Owner Centre:

- Chat live with online help representatives.
- Use the Vehicle Tools section.
- Access third party enthusiast sites and social media networks.
- Locate owner resources such as lease-end, financing, and warranty information.
- Retrieve your favorite articles, quizzes, tips, and multimedia galleries organized into the Features and Auto Care Sections.
- Download the owner manual for your vehicle, quickly and easily.
- Find the Chevrolet-recommended maintenance services for your vehicle.

GM Mobility Reimbursement Program

This program is available to qualified applicants for cost reimbursement of eligible aftermarket adaptive equipment required for the vehicle, such as hand controls or a wheelchair/scooter lift for the vehicle.

For more information on the limited offer, visit www.gmmobility.com or call the GM Mobility Assistance Center at 1-800-323-9935. Text Telephone (TTY) users, call 1-800-833-9935.

General Motors of Canada also has a Mobility Program. Visit www.gm.ca or call 1-800-GM-DRIVE (463-7483) for details. TTY users call 1-800-263-3830.

Roadside Assistance Program

For U.S.-purchased vehicles, call 1-800-243-8872. (Text Telephone (TTY): 1-888-889-2438.)

For Canadian-purchased vehicles, call 1-800-268-6800.

Service is available 24 hours a day, 365 days a year.

Calling for Assistance

When calling Roadside Assistance, have the following information ready:

- Your name, home address, and home telephone number.
- Telephone number of your location.
- Location of the vehicle.

- Model, year, color, and license plate number of the vehicle.
- Odometer reading, Vehicle Identification Number (VIN), and delivery date of the vehicle.
- Description of the problem.

Coverage

Services are provided up to 5 years/ 160 000 km (100,000 mi), whichever comes first.

In the U.S., anyone driving the vehicle is covered. In Canada, a person driving the vehicle without permission from the owner is not covered.

Roadside Assistance is not a part of the New Vehicle Limited Warranty. General Motors North America and Chevrolet reserve the right to make any changes or discontinue the Roadside Assistance program at any time without notification.

General Motors North America and Chevrolet reserve the right to limit services or payment to an owner or driver if they decide the claims are made too often, or the same type of claim is made many times.

Services Provided

- **Emergency Fuel Delivery:** Delivery of enough fuel for the vehicle to get to the nearest service station.
- **Lock-Out Service:** Service to unlock the vehicle if you are locked out. A remote unlock may be available if you have OnStar. For security reasons, the driver must present identification before this service is given.
- **Emergency Tow from a Public Road or Highway:** Tow to the nearest Chevrolet dealer for warranty service, or if the vehicle was in a crash and cannot be driven. Assistance is not given when the vehicle is stuck in the sand, mud, or snow.
- **Flat Tire Change:** Service to change a flat tire with the spare tire. The spare tire, if equipped, must be in good condition and properly inflated. It is the owner's responsibility for the repair or replacement of the tire if it is not covered by the warranty.
- **Battery Jump Start:** Service to jump start a dead battery.

Services Not Included in Roadside Assistance

- Impound towing caused by violation of any laws.
- Legal fines.
- Mounting, dismounting, or changing of snow tires, chains, or other traction devices.

Service is not provided if a vehicle is in an area that is not accessible to the service vehicle or is not a regularly traveled or maintained public road, which includes ice and winter roads. Off-road use is not covered.

Services Specific to Canadian-Purchased Vehicles

- **Fuel Delivery:** Reimbursement is up to 7 liters. Diesel fuel delivery may be restricted. Propane and other fuels are not provided through this service.
- **Lock-Out Service:** Vehicle registration is required.
- **Trip Interruption Benefits and Assistance:** Must be over 150 kilometers from where your trip was started to qualify. General Motors of Canada Limited requires pre-authorization, original detailed receipts, and a copy of the repair orders. Once authorization has been received, the Roadside Assistance advisor will help to make arrangements and explain how to receive payment.
- **Alternative Service:** If assistance cannot be provided right away, the Roadside Assistance advisor may give permission to get local emergency road service. You will receive payment, up to $100, after sending the original receipt to Roadside Assistance. Mechanical failures may be covered, however any cost for parts and labor for repairs not covered by the warranty are the owner responsibility.

Scheduling Service Appointments

When the vehicle requires warranty service, contact your dealer and request an appointment. By scheduling a service appointment and advising the service consultant of your transportation needs, your dealer can help minimize your inconvenience.

If the vehicle cannot be scheduled into the service department immediately, keep driving it until it can be scheduled for service, unless, of course, the problem is safety related. If it is, please call your dealership, let them know this, and ask for instructions.

If your dealer requests you to bring the vehicle for service, you are urged to do so as early in the work day as possible to allow for same-day repair.

Courtesy Transportation Program

To enhance your ownership experience, we and our participating dealers are proud to offer Courtesy Transportation, a customer support program for vehicles with the Bumper-to-Bumper (Base Warranty Coverage period in Canada), extended powertrain, and/or hybrid-specific warranties in both the U.S. and Canada.

Several Courtesy Transportation options are available to assist in reducing inconvenience when warranty repairs are required.

Courtesy Transportation is not a part of the New Vehicle Limited Warranty. A separate booklet entitled “Limited Warranty and Owner Assistance Information” furnished with each new vehicle provides detailed warranty coverage information.

Transportation Options

Warranty service can generally be completed while you wait. However, if you are unable to do so, your dealer may offer the following transportation options:

Shuttle Service

This includes one-way or round-trip shuttle service within reasonable time and distance parameters of your dealer's area.

Public Transportation or Fuel Reimbursement

If overnight warranty repairs are needed, and public transportation is used, the expense must be supported by original receipts and within the maximum amount allowed by GM for shuttle service. If U.S. customers arrange their own transportation, limited reimbursement for reasonable fuel expenses may be available. Claim amounts should reflect actual costs and be supported by original receipts. See your dealer for information.

Courtesy Rental Vehicle

For an overnight warranty repair, the dealer may provide an available courtesy rental vehicle or provide for reimbursement of a rental vehicle. Reimbursement is limited and must be supported by original receipts as well as a signed and completed rental agreement and meet state/provincial, local, and rental vehicle provider requirements. Requirements vary and may include minimum age requirements, insurance coverage, credit card, etc. Additional fees such as fuel usage charges, taxes, levies, usage fees, excessive mileage, or rental usage beyond the completion of the repair are also your responsibility. It may not be possible to provide a like vehicle as a courtesy rental.

Additional Program Information

All program options, such as shuttle service, may not be available at every dealer. Contact your dealer for specific availability.

General Motors reserves the right to unilaterally modify, change, or discontinue Courtesy Transportation at any time and to resolve all questions of claim eligibility pursuant to the terms and conditions described herein at its sole discretion.

Collision Damage Repair

If the vehicle is involved in a collision and it is damaged, have the damage repaired by a qualified technician using the proper equipment and quality replacement parts. Poorly performed collision repairs diminish the vehicle resale

value, and safety performance can be compromised in subsequent collisions.

Collision Parts

Genuine GM Collision parts are new parts made with the same materials and construction methods as the parts with which the vehicle was originally built. Genuine GM Collision parts are the best choice to ensure that the vehicle's designed appearance, durability, and safety are preserved. The use of Genuine GM parts can help maintain the GM New Vehicle Limited Warranty.

Recycled original equipment parts may also be used for repair. These parts are typically removed from vehicles that were total losses in prior crashes. In most cases, the parts being recycled are from undamaged sections of the vehicle. A recycled original equipment GM part may be an acceptable choice to maintain the vehicle's originally designed appearance and safety performance; however, the history of these parts is not known. Such parts are not covered by the GM New Vehicle Limited Warranty, and any related failures are not covered by that warranty.

Aftermarket collision parts are also available. These are made by companies other than GM and may not have been tested for the vehicle. As a result, these parts may fit poorly, exhibit premature durability/corrosion problems, and may not perform properly in subsequent collisions. Aftermarket parts are not covered by the GM New Vehicle Limited Warranty, and any vehicle failure related to such parts is not covered by that warranty.

Repair Facility

GM also recommends that you choose a collision repair facility that meets your needs before you ever need collision repairs. Your dealer may have a collision repair center with GM-trained technicians and state-of-the-art equipment, or be able to recommend a collision repair center that has GM-trained technicians and comparable equipment.

Insuring the Vehicle

Protect your investment in the GM vehicle with comprehensive and collision insurance coverage. There are significant differences in the quality of coverage afforded by various insurance policy terms. Many insurance policies provide reduced protection to the GM vehicle by limiting compensation for damage repairs through the use of aftermarket collision parts. Some insurance companies will not specify aftermarket collision parts. When purchasing insurance, we recommend that you ensure that the vehicle will be repaired with GM original equipment collision parts. If such insurance coverage is not available from your current insurance carrier, consider switching to another insurance carrier.

If the vehicle is leased, the leasing company may require you to have insurance that ensures repairs with Genuine GM Original Equipment Manufacturer (OEM) parts or Genuine Manufacturer replacement parts. Read the lease carefully, as you may be charged at the end of the lease for poor quality repairs.

If a Crash Occurs

If there has been an injury, call emergency services for help. Do not leave the scene of a crash until all matters have been taken care of. Move the vehicle only if its position puts you in danger, or you are instructed to move it by a police officer.

Give only the necessary information to police and other parties involved in the crash.

For emergency towing see *Roadside Assistance Program on page 13-5*.

Gather the following information:

- Driver name, address, and telephone number.
- Driver license number.
- Owner name, address, and telephone number.
- Vehicle license plate number.
- Vehicle make, model, and model year.
- Vehicle Identification Number (VIN).
- Insurance company and policy number.
- General description of the damage to the other vehicle.

Choose a reputable repair facility that uses quality replacement parts. See “Collision Parts” earlier in this section.

If the airbag has inflated, see *What Will You See after an Airbag Inflates? on page 3-21*.

Managing the Vehicle Damage Repair Process

In the event that the vehicle requires damage repairs, GM recommends that you take an active role in its repair. If you have a pre-determined repair facility of choice, take the vehicle there, or have it towed there. Specify to the facility that any required replacement collision parts be original equipment parts, either new Genuine GM parts or recycled original GM parts. Remember, recycled parts will not be covered by the GM vehicle warranty.

Insurance pays the bill for the repair, but you must live with the repair. Depending on your policy limits, your insurance company may initially value the repair using aftermarket parts. Discuss this with the repair professional, and insist on Genuine GM parts. Remember, if the vehicle is leased, you may be obligated to have the vehicle repaired with Genuine GM parts, even if your insurance coverage does not pay the full cost.

If another party's insurance company is paying for the repairs, you are not obligated to accept a repair valuation based on that insurance company's collision policy repair limits, as you have no contractual limits with that company. In such cases, you can have control of the repair and parts choices as long as the cost stays within reasonable limits.

Service Publications Ordering Information

Service Manuals

Service Manuals have the diagnosis and repair information on the engines, transmission, axle, suspension, brakes, electrical, steering, body, etc.

Service Bulletins

Service Bulletins give additional technical service information needed to knowledgeably service General Motors cars and trucks. Each bulletin contains instructions to assist in the diagnosis and service of the vehicle.

Owner Information

Owner publications are written specifically for owners and intended to provide basic operational information about the vehicle. The Owner Manual includes the Maintenance Schedule for all models.

In-Portfolio: Includes a Portfolio, Owner Manual, and Warranty Manual.

RETAIL SELL PRICE: $35.00 – $40.00 (U.S.) plus handling and shipping fees.

Without Pouch: Owner Manual only.

RETAIL SELL PRICE:
$25.00 (U.S.) plus handling and shipping fees.

Current and Past Models

Technical Service Bulletins and Manuals are available for current and past model GM vehicles.

ORDER TOLL FREE:
1-800-551-4123 Monday – Friday
8:00 AM – 6:00 PM Eastern Time

For Credit Card Orders Only (VISA-MasterCard-Discover), see Helm, Inc. at: www.helminc.com.

Or write to:

Helm, Incorporated
Attention: Customer Service
47911 Halyard Drive
Plymouth, MI 48170

Prices are subject to change without notice and without incurring obligation. Allow ample time for delivery.

All listed prices are quoted in U.S. funds. Make checks payable in U.S. funds.

Radio Frequency Identification (RFID)

RFID technology is used in some vehicles for functions such as tire pressure monitoring and ignition system security, as well as in connection with conveniences such as Remote Keyless Entry (RKE) transmitters for remote door locking/unlocking and starting, and in-vehicle transmitters for garage door openers. RFID technology in GM vehicles does not use or record personal information or link with any other GM system containing personal information.

Radio Frequency Statement

This vehicle has systems that operate on a radio frequency that complies with Part 15/Part 18 of the Federal Communications Commission (FCC) rules and with Industry Canada Standards RSS-GEN/210/220/310.

Operation is subject to the following two conditions:

1. The device may not cause harmful interference.
2. The device must accept any interference received, including interference that may cause undesired operation of the device.

Changes or modifications to any of these systems by other than an authorized service facility could void authorization to use this equipment.

Reporting Safety Defects

Reporting Safety Defects to the United States Government

If you believe that your vehicle has a defect which could cause a crash or could cause injury or death, you should immediately inform the National Highway Traffic Safety Administration (NHTSA) in addition to notifying General Motors.

If NHTSA receives similar complaints, it may open an investigation, and if it finds that a safety defect exists in a group of vehicles, it may order a recall and remedy campaign.

However, NHTSA cannot become involved in individual problems between you, your dealer, or General Motors.

To contact NHTSA, you may call the Vehicle Safety Hotline toll-free at 1-888-327-4236 (TTY: 1-800-424-9153); go to *http://www.safercar.gov;* or write to:

Administrator, NHTSA
1200 New Jersey Avenue, S.E.
Washington, D.C. 20590

You can also obtain other information about motor vehicle safety from *http://www.safercar.gov*.

Reporting Safety Defects to the Canadian Government

If you live in Canada, and you believe that the vehicle has a safety defect, notify Transport Canada immediately, and notify General Motors of Canada Limited. Call Transport Canada at 1-800-333-0510 or write to:

Transport Canada
Road Safety Branch
80 rue Noel
Gatineau , QC J8Z 0A1

Reporting Safety Defects to General Motors

In addition to notifying NHTSA (or Transport Canada) in a situation like this, notify General Motors.

Call 1-800-222-1020, or write:

Chevrolet Motor Division
Chevrolet Customer Assistance Center
P.O. Box 33170
Detroit, MI 48232-5170

In Canada, call 1-800-263-3777 (English) or 1-800-263-7854 (French), or write:

General Motors of Canada Limited
Customer Care Centre, Mail Code: CA1-163-005
1908 Colonel Sam Drive
Oshawa, Ontario L1H 8P7

Vehicle Data Recording and Privacy

The vehicle has a number of computers that record information about the vehicle's performance and how it is driven. For example, the vehicle uses computer modules to monitor and control engine and transmission performance, to monitor the conditions for airbag deployment and deploy them in a crash, and, if equipped, to provide antilock braking to help the driver control the vehicle. These modules may store data to help the dealer technician service the vehicle. Some modules may also store data about how the vehicle is operated, such as rate of fuel consumption or average speed. These modules may retain personal preferences, such as radio presets, seat positions, and temperature settings.

Event Data Recorders

This vehicle is equipped with an event data recorder (EDR). The main purpose of an EDR is to record, in certain crash or near crash-like situations, such as an air bag deployment or hitting a road obstacle, data that will assist in understanding how a vehicle's systems performed. The EDR is designed to record data related to vehicle dynamics and safety systems for a short period of time, typically 30 seconds or less. The EDR in this vehicle is designed to record such data as:

- How various systems in your vehicle were operating;
- Whether or not the driver and passenger safety belts were buckled/fastened;
- How far (if at all) the driver was depressing the accelerator and/or brake pedal; and,
- How fast the vehicle was traveling.

These data can help provide a better understanding of the circumstances in which crashes and injuries occur. NOTE: EDR data are recorded by your vehicle only if a non-trivial crash situation occurs; no data are recorded by the EDR under normal driving conditions and no personal data (e.g., name, gender, age, and crash location) are recorded. However, other parties, such as law enforcement, could combine the EDR data with the type of personally identifying data routinely acquired during a crash investigation.

To read data recorded by an EDR, special equipment is required, and access to the vehicle or the EDR is needed. In addition to the vehicle manufacturer, other parties, such as law enforcement, that have the special equipment, can read the information if they have access to the vehicle or the EDR.

GM will not access this data or share it with others except: with the consent of the vehicle owner or,

if the vehicle is leased, with the consent of the lessee; in response to an official request by police or similar government office; as part of GM's defense of litigation through the discovery process; or, as required by law. Data that GM collects or receives may also be used for GM research needs or may be made available to others for research purposes, where a need is shown and the data is not tied to a specific vehicle or vehicle owner.

OnStar®

If the vehicle is equipped with OnStar® and has an active subscription, additional data may be collected through the OnStar system. This includes information about the vehicle's operation; collisions involving the vehicle; the use of the vehicle and its features; and, in certain situations, the location and approximate GPS speed of the vehicle. Refer to the OnStar Terms and Conditions and Privacy Statement on the OnStar website.

Infotainment System

If the vehicle is equipped with a navigation system as part of the infotainment system, use of the system may result in the storage of destinations, addresses, telephone numbers, and other trip information. See the infotainment manual for information on stored data and for deletion instructions.

✍ NOTES

OnStar

OnStar Overview
OnStar Overview 14-1

OnStar Services
Emergency 14-3
Security 14-3
Navigation 14-3
Connections 14-4
Vehicle Diagnostics 14-6

OnStar Additional Information
OnStar Additional Information 14-6

OnStar Overview

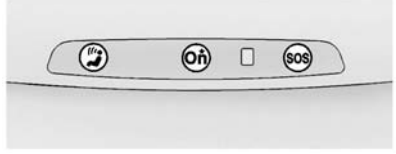

Manual Rearview Mirror

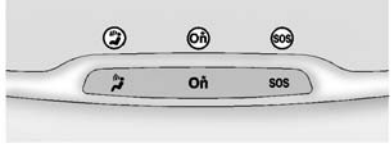

Automatic Dimming Rearview Mirror

Voice Command Button

Blue OnStar Button

Emergency Button

This vehicle may be equipped with a comprehensive, in-vehicle system that can connect to a live OnStar Advisor for Emergency, Security, Navigation, Connection, and Diagnostic Services. OnStar services may require a paid subscription. OnStar requires the vehicle battery and electrical system, cellular service, and GPS satellite signals to be available and operating. OnStar acts as a link to existing public emergency service providers. OnStar may collect information about you and your vehicle, including location information. See OnStar's Terms and Conditions and Privacy Statement for more details including system limitations at www.onstar.com (U.S.) or www.onstar.ca (Canada).

Manual and Automatic Dimming Rearview Mirrors

- Press the mirror controls. If OnStar does not respond, adjust finger position or remove any gloves.
- Avoid touching the controls while adjusting the mirror. To cancel a command press .

- Clean the mirror while the vehicle is off to avoid making calls.

Status Indicator

The OnStar system status light is next to the OnStar controls on the manual rearview mirror.

If the status light is:

- Solid Green: System is on.
- Flashing Green: On a call.
- Red: Indicates a problem.
- Off: System is off. Press the blue OnStar button twice to speak with an OnStar Advisor.

For the automatic dimming rearview mirror, the status is provided through the Display on Demand Icons.

- Three Color Icons: The system is enabled and active.
- No Icons: The vehicle is in motion or the OnStar subscription is inactive
- Blinking: Button has been pressed.
- Solid: On a call.
- ! (Fault Icon On): Indicates a problem.

OnStar Commands

Press or call 1-888-4-ONSTAR (1-888-466-7827) to speak to an Advisor.

Press to:

- Make a call, end a call, or answer an incoming call.
- Give OnStar Hands-Free Calling voice commands.
- Give OnStar Turn-by-Turn Navigation voice commands. Requires a specific OnStar subscription plan.
- Obtain the WiFi network name, or Service Set Identifier or SSID, and passphrase (if equipped).

Press to connect to a live Advisor to:

- Verify account information or update contact information.
- Get driving directions. Requires the available Requires a specific OnStar subscription plan.
- Receive On-Demand Diagnostics for a check of the vehicle's key operating systems.
- Receive Roadside Assistance.
- Manage WiFi Settings (if equipped).

Press the OnStar Emergency button SOS to get a priority connection to an Emergency Advisor available 24/7 to:

- Get help for an emergency.
- Be a Good Samaritan or respond to an AMBER Alert.
- Get assistance in severe weather or other crisis and get evacuation routes.

OnStar Services

Emergency

With Automatic Crash Response, the OnStar system can automatically connect to an OnStar Emergency Advisor. The built-in system can automatically connect to help in certain crashes.

Press SOS to connect to an OnStar Emergency Advisor. GPS technology is used to identify the vehicle location and can provide important information to emergency personnel. OnStar Emergency Advisors are trained to provide assistance and link to existing public emergency service providers in emergency situations.

With OnStar Crisis Assist, specially trained Crisis Advisors are available 24 hours a day, 7 days a week, to provide a central point of contact, assistance, and information if a crisis occurs.

Security

OnStar provides services including Stolen Vehicle Assistance, Remote Ignition Block, and Roadside Assistance, if equipped. OnStar can unlock the vehicle doors remotely, if equipped with automatic door locks, and can help police locate the vehicle if it is stolen.

Navigation

OnStar navigation requires a specific OnStar subscription plan.

Press On to receive directions or have them sent to the vehicle navigation screen, if equipped. Destinations can also be forwarded to the vehicle from MapQuest.com.

Turn-by-Turn Navigation

1. Press On to connect to a live Advisor.
2. Request directions.
3. Directions are downloaded to the vehicle.
4. Follow the voice-guided commands.

Using Voice Commands During a Planned Route

Cancel Route

1. Press . System responds: “OnStar ready,” then a tone. Say “Cancel route.” System responds: “Do you want to cancel directions?”
2. Say “Yes.” System responds: “OK, request completed, thank you, goodbye.”

Route Preview

1. Press . System responds: “OnStar ready,” then a tone.
2. Say “Route preview.” System responds with the next three maneuvers.

Repeat

1. Press . System responds: “OnStar ready,” then a tone.

2. Say “Repeat.” System responds with the last direction given, then responds with “OnStar ready,” then a tone.

Get My Destination

1. Press . System responds: “OnStar ready,” then a tone.
2. Say “Get my destination.” System responds with the address and the distance to the destination, then responds with “OnStar ready,” then a tone.

Other Navigation Services Available from OnStar

OnStar eNav: Subscribers can send destinations from MapQuest.com to the vehicle Turn-by-Turn Navigation or screen-based navigation system (if equipped). When ready, the directions will be downloaded to the vehicle.

Destination Download: Press , then request the Advisor to download directions to the navigation system in the vehicle (if equipped). After the call ends, press the “Go” button on the navigation screen to begin driving directions.

If directions are downloaded to the navigation system, the route can only be canceled through the navigation system.

Destinations can also be downloaded on the go. For information about eNav and Destination Download, see www.onstar.com (U.S.) or www.onstar.ca (Canada).

Connections

The required specific Onstar subscription plan includes the services that follow to help customers stay connected.

For coverage maps, see www.onstar.com (U.S.) or www.onstar.ca (Canada).

WiFi Connectivity (If Equipped)

The vehicle has a WiFi hotspot that provides a high-speed, wireless Internet connection to connect multiple mobile devices (data plan required).

1. To retrieve WiFi hotspot information, press and select or say “WiFi settings.”
2. The WiFi settings will display the WiFi network name/SSID, passphrase, and level of encryption.
3. To change the SSID or passphrase, press or call 1-888-4-ONSTAR to connect with an Advisor.

OnStar RemoteLink® Mobile App (If Equipped)

Download the OnStar RemoteLink mobile app to select Apple®, Android™, and BlackBerry® or Windows 7 or 8 mobile devices. From the mobile device, check the vehicle’s fuel level, oil life, or tire

pressure (if the vehicle is equipped with the tire pressure monitoring system); or activate remote horn and lights. Also remote start the vehicle (if factory equipped) or unlock the doors from anywhere with a wireless connection (if equipped with automatic locks). With the required specific OnStar service plan, a destination can be sent to the vehicle. For OnStar RemoteLink information and compatibility, see www.onstar.com (U.S.) or www.onstar.ca (Canada).

OnStar RemoteLink® Key Fob Services

This feature is included for five years and allows for remote door lock/unlock (if equipped with automatic locks), remote start (if factory equipped), or activation of horn and lights from anywhere with a wireless signal. Download the app and start using it any time during the trial period to get started.

OnStar Hands-Free Calling

This service allows calls to be made and received from the vehicle.

To Make a Call

1. Press ⓗ. System responds: “OnStar ready.”
2. Say “Call.” System responds: “Call. Please say the name or number to call.”
3. Say the entire number without pausing, including a “1” and the area code. System responds: “OK calling.”

Calling 911 Emergency

1. Press ⓗ. System responds: “OnStar Ready,” followed by a tone.
2. Say “Call.” System responds: “Call. Please say the name or number to call.”
3. Say “911” without pausing. System responds: “911.”
4. Say “Call.” System responds: “OK, dialing 911.”

Retrieve My Number

1. Press ⓗ. System responds: “OnStar ready.”
2. Say “My number.” System responds: “Your OnStar Hands-Free Calling number is,” then says the number.

End a Call

Press ⓗ. System responds: “Call ended.”

Store a Name Tag for Speed Dialing

1. Press ⓗ. System responds: “OnStar ready.”
2. Say “Store.” System responds: “Please say the number you would like to store.”
3. Say the entire number without pausing. System responds: “Please say the name tag.”

4. Pick a name tag. System responds: “About to store <name tag>. Does that sound OK?”
5. Say “Yes” or “No” to try again. System responds: “OK, storing <name tag>.”

Place a Call Using a Stored Number

1. Press . System responds: “OnStar ready.”
2. Say “Call <name tag>.” System responds: “OK, calling <name tag>.”

Verify Minutes and Expiration

Press and say “Minutes” then “Verify” to check how many minutes remain and their expiration date.

Vehicle Diagnostics

OnStar Vehicle Diagnostics can perform a vehicle check every month. It will check the engine, transmission, antilock brakes, and other major vehicle systems. It also checks the tire pressures, if the vehicle is equipped with the Tire Pressure Monitoring System. If an On-Demand Diagnostics check is needed, press , and an Advisor can run a check.

OnStar Additional Information

Transferring Service

Press to request account transfer eligibility information. The Advisor can assist in canceling or removing account information.

Selling/Transferring the Vehicle

Call 1-888-4-ONSTAR immediately to terminate your OnStar services if the vehicle is disposed of, sold, transferred, or if the lease ends.

Reactivation for Subsequent Owners

Press and follow the prompts to speak to an Advisor as soon as possible. The Advisor will update vehicle records and explain the OnStar service options available.

How OnStar Service Works

Automatic Crash Response, Emergency Services, Crisis Assist, Stolen Vehicle Assistance, Vehicle Diagnostics, Remote Door Unlock, Roadside Assistance, Turn-by-Turn Navigation, and Hands-Free Calling are available on most vehicles. Not all OnStar services are available everywhere or on all vehicles. For more information, a full description of OnStar services, system limitations, and OnStar terms and conditions:

- Call 1-888-4-ONSTAR. (1-888-466-7827).
- See www.onstar.com (U.S.).
- See www.onstar.ca (Canada).
- Call TTY 1-877-248-2080.
- Press ⓪ to speak with an Advisor.

OnStar services cannot work unless the vehicle is in a place where OnStar has an agreement with a wireless service provider for service in that area. The wireless service provider must also have coverage, network capacity, reception, and technology compatible with OnStar services. Service involving location information about the vehicle cannot work unless GPS signals are available, unobstructed, and compatible with the OnStar hardware. OnStar services may not work if the OnStar equipment is not properly installed or it has not been properly maintained. If equipment or software is added, connected, or modified, OnStar services may not work. Other problems beyond the control of OnStar may prevent service such as hills, tall buildings, tunnels, weather, electrical system design and architecture of the vehicle, damage to the vehicle in a crash, or wireless phone network congestion or jamming.

See *Radio Frequency Statement on page 13-12*.

Services for People with Disabilities

Advisors provide services to help subscribers with physical disabilities and medical conditions.

Press ⓪ for help with:

- Locating a gas station with an attendant to pump gas.
- Finding a hotel, restaurant, etc., that meets accessibility needs.
- Providing directions to the closest hospital or pharmacy in urgent situations.

TTY Users

OnStar has the ability to communicate to deaf, hard-of-hearing, or speech-impaired customers while in the vehicle. The available dealer-installed TTY system can provide in-vehicle access to all of the OnStar services, except Virtual Advisor and OnStar Turn-by-Turn Navigation.

OnStar Personal Identification Number (PIN)

A PIN is needed to access some of the OnStar services, like Remote Door Unlock and Stolen Vehicle Assistance. The PIN will need to be changed the first time when speaking with an Advisor. To change the OnStar PIN contact an OnStar Advisor by pressing ⓞⓝ or calling 1-888-4-ONSTAR.

Warranty

OnStar equipment may be warranted as part of the vehicle warranty.

Languages

The vehicle can be programmed to respond in multiple languages. Press ⓞⓝ and ask for an Advisor. Advisors are available in English, Spanish, and French. Available languages may vary by country.

Potential Issues

OnStar cannot perform Remote Door Unlock or Stolen Vehicle Assistance after the vehicle has been off continuously for five days. After five days, OnStar can contact Roadside Assistance and a locksmith to help gain access to the vehicle.

Global Positioning System (GPS)

- Obstruction of the GPS can occur in a large city with tall buildings; in parking garages; around airports; in tunnels, underpasses, or parking garages; or in an area with very dense trees. If GPS signals are not available, the OnStar system should still operate to call OnStar. However, OnStar could have difficulty identifying the exact location.
- In emergency situations, OnStar can use the last stored GPS location to send to emergency responders.

A temporary loss of GPS can cause loss of the ability to send a Turn-by-Turn Navigation route. The Advisor may give a verbal route or may ask for a call back after the vehicle is driven into an open area.

Cellular and GPS Antennas

Do not place items over or near the antenna to prevent blocking cellular and GPS signal reception. Cellular reception is required for OnStar to send remote signals to the vehicle.

Unable to Connect to OnStar Message

If there is limited cellular coverage or the cellular network has reached maximum capacity, this message may come on. Press ⓞⓝ to try the call again or try again after driving a few miles into another cellular area.

Vehicle and Power Issues

OnStar services require a vehicle electrical system, wireless service, and GPS satellite technologies to be available and operating for features to function properly. These systems may not operate if the battery is discharged or disconnected.

Add-on Electrical Equipment

The OnStar system is integrated into the electrical architecture of the vehicle. Do not add any electrical equipment. See *Add-On Electrical Equipment on page 9-61*. Added electrical equipment may interfere with the operation of the OnStar system and cause it to not operate.

Privacy

The complete OnStar Privacy Statement may be found at www.onstar.com (U.S.), or www.onstar.ca (Canada). We recommend that you review it. If you have any questions, call 1-888-4-ONSTAR (1-888-466-7827) or press On to speak with an Advisor. Users of wireless communications are cautioned that the privacy of any information sent via wireless cellular communications cannot be assured. Third parties may unlawfully intercept or access transmissions and private communications without consent.

OnStar - libcurl and unzip acknowledgments

Certain OnStar components include libcurl and unzip software. Below are the notices and licenses associated with this software:

libcurl:

COPYRIGHT AND PERMISSION NOTICE

Copyright (c) 1996 - 2010, Daniel Stenberg, <daniel@haxx.se>.

All rights reserved.

Permission to use, copy, modify, and distribute this software for any purpose with or without fee is hereby granted, provided that the above copyright notice and this permission notice appear in all copies.

THE SOFTWARE IS PROVIDED “AS IS,” WITHOUT WARRANTY OF ANY KIND, EXPRESS OR IMPLIED, INCLUDING BUT NOT LIMITED TO THE WARRANTIES OF MERCHANTABILITY, FITNESS FOR A PARTICULAR PURPOSE AND NONINFRINGEMENT OF THIRD PARTY RIGHTS. IN NO EVENT SHALL THE AUTHORS OR COPYRIGHT HOLDERS BE LIABLE FOR ANY CLAIM, DAMAGES OR OTHER LIABILITY, WHETHER IN AN ACTION OF CONTRACT, TORT OR OTHERWISE, ARISING FROM, OUT OF OR IN CONNECTION WITH THE SOFTWARE OR THE USE OR OTHER DEALINGS IN THE SOFTWARE.

Except as contained in this notice, the name of a copyright holder shall not be used in advertising or otherwise to promote the sale, use

or other dealings in this Software without prior written authorization of the copyright holder.

unzip:

This is version 2005-Feb-10 of the Info-ZIP copyright and license. The definitive version of this document should be available at ftp://ftp.info-zip.org/pub/infozip/license.html indefinitely.

Copyright (c) 1990-2005 Info-ZIP. All rights reserved.

For the purposes of this copyright and license, “Info-ZIP” is defined as the following set of individuals:

Mark Adler, John Bush, Karl Davis, Harald Denker, Jean-Michel Dubois, Jean-loup Gailly, Hunter Goatley, Ed Gordon, Ian Gorman, Chris Herborth, Dirk Haase, Greg Hartwig, Robert Heath, Jonathan Hudson, Paul Kienitz, David Kirschbaum, Johnny Lee, Onno van der Linden, Igor Mandrichenko, Steve P. Miller, Sergio Monesi, Keith Owens, George Petrov, Greg Roelofs, Kai Uwe Rommel, Steve Salisbury, Dave Smith, Steven M. Schweda, Christian Spieler, Cosmin Truta, Antoine Verheijen, Paul von Behren, Rich Wales, Mike White.

This software is provided “as is,” without warranty of any kind, express or implied. In no event shall Info-ZIP or its contributors be held liable for any direct, indirect, incidental, special or consequential damages arising out of the use of or inability to use this software.

Permission is granted to anyone to use this software for any purpose, including commercial applications, and to alter it and redistribute it freely, subject to the following restrictions:

1. Redistributions of source code must retain the above copyright notice, definition, disclaimer, and this list of conditions.
2. Redistributions in binary form (compiled executables) must reproduce the above copyright notice, definition, disclaimer, and this list of conditions in documentation and/or other materials provided with the distribution. The sole exception to this condition is redistribution of a standard UnZipSFX binary (including SFXWiz) as part of a self-extracting archive; that is permitted without inclusion of this license, as long as the normal SFX banner has not been removed from the binary or disabled.
3. Altered versions–including, but not limited to, ports to new operating systems, existing ports with new graphical interfaces, and dynamic, shared, or static library versions–must be plainly marked as such and must not be misrepresented as being the original source. Such altered versions also must not be misrepresented as being Info-ZIP releases–including, but not limited to, labeling of the altered versions with the names “Info-ZIP” (or any variation

thereof, including, but not limited to, different capitalizations), “Pocket UnZip,” “WiZ” or “MacZip” without the explicit permission of Info-ZIP. Such altered versions are further prohibited from misrepresentative use of the Zip-Bugs or Info-ZIP e-mail addresses or of the Info-ZIP URL(s).

4. Info-ZIP retains the right to use the names “Info-ZIP,” “Zip,” “UnZip,” “UnZipSFX,” “WiZ,” “Pocket UnZip,” “Pocket Zip,” and “MacZip” for its own source and binary releases.

✍ NOTES

A

Accessories and Modifications 10-3
Accessory Power 9-23
Active Fuel Management® 9-27
Add-On Electrical Equipment 9-61
Additional Information OnStar® 14-6
Additional Maintenance and Care 11-9
Air Cleaner/Filter, Engine 10-21, 10-23, 10-24
Air Filter, Passenger Compartment 8-4
Air Vents 8-3
Airbag System
  Check 3-27
  How Does an Airbag Restrain? 3-20
  Passenger Sensing System 3-22
  What Makes an Airbag Inflate? 3-20
Airbag System (cont'd)
  What Will You See after an Airbag Inflates? 3-21
  When Should an Airbag Inflate? 3-19
  Where Are the Airbags? 3-17
Airbags
  Adding Equipment to the Vehicle 3-26
  Passenger Status Indicator . . .5-15
  Readiness Light 5-15
  Servicing Airbag-Equipped Vehicles 3-26
  System Check 3-15
Alarm
  Vehicle Security 2-11
All-Season Tires 10-57
AM-FM Radio 7-7
Antenna
  Multi-band 7-12
Antilock Brake
  System (ABS) 9-36
  Warning Light 5-20
Appearance Care
  Exterior 10-100
  Interior 10-105
Assistance Program, Roadside 13-5
Audio Players 7-12
  CD 7-12
Audio System
  Backglass Antenna 7-11
  Diversity Antenna System 7-12
  Radio Reception 7-10
  Theft-Deterrent Feature 7-2
Automatic
  Dimming Mirrors 2-14
  Door Locks 2-8
  Headlamp System 6-3
  Transmission 9-28
  Transmission Fluid 10-20
Automatic Transmission
  Manual Mode 9-31
  Shift Lock Control Function Check 10-42
Auxiliary Devices 7-14
Axle, Rear 10-41

B

Battery 10-41
Exterior Lighting Battery Saver 6-7
Jump Starting 10-96
Load Management 6-6
Power Protection 6-7
Voltage and Charging Messages 5-33
Blade Replacement, Wiper . . . 10-43
Bluetooth
Overview 7-20, 7-21, 7-25
Brake
System Warning Light 5-19
Brakes 10-38
Antilock 9-36
Assist 9-38
Fluid 10-39
Parking 9-37
System Messages 5-33
Braking 9-3
Break-In, New Vehicle 9-18
Bulb Replacement 10-48
Halogen Bulbs 10-44
Headlamp Aiming 10-44
Headlamps 10-44
Bulb Replacement (cont'd)
Headlamps, Front Turn Signal, and Parking Lamps 10-45, 10-46
High Intensity Discharge (HID) Lighting 10-45
License Plate Lamps 10-47
Taillamps, Turn Signal, and Stoplamps 10-46
Buying New Tires 10-74

C

Calibration 5-4
California
Fuel Requirements 9-53
Perchlorate Materials Requirements 10-3
Warning 10-3
Camera
Rear Vision (RVC) 9-49
Canadian Vehicle Owners iii
Capacities and Specifications 12-2
Carbon Monoxide
Engine Exhaust 9-27
Trunk 2-9
Winter Driving 9-12
Cautions, Danger, and Warnings iv
CD Player 7-12
Center Console Storage 4-2
Chains, Tire 10-79
Charging System Light 5-16
Check
Engine Light 5-16
Ignition Transmission Lock 10-42
Child Restraints
Infants and Young Children 3-30
Lower Anchors and Tethers for Children 3-36
Older Children 3-28
Securing 3-42, 3-44
Systems 3-33
Circuit Breakers 10-49
Cleaning
Exterior Care 10-100
Interior Care 10-105

Climate Control Systems 8-1
Air Conditioning 8-1
Heating 8-1
Clock 5-4
Cluster, Instrument 5-7
Clutch, Hydraulic 10-21
Collision Damage Repair 13-8
Compact Spare Tire 10-95
Compartments
Storage 4-1
Compass 5-4
Messages 5-33
Competition Oriented Tires ...10-58
Competitive Driving Mode 9-40
Compressor Kit, Tire
Sealant.....10-81
Connections
OnStar® 14-4
Control
Traction and Electronic
Stability 9-38
Control of a Vehicle 9-3
Convenience Net 4-5
Convertible Top 2-19
Messages 5-33
Convex Mirrors 2-13
Coolant
Engine 10-30
Engine Temperature
Gauge 5-12
Cooling System 10-25,
10-27–10-29
Engine Messages 5-35
Courtesy Transportation
Program 13-7
Cover
Engine 10-13
Tonneau 4-3
Cruise Control 9-45
Light 5-23
Messages 5-34
Customer Assistance 13-4
Offices 13-3
Text Telephone (TTY)
Users 13-4
Customer Information
Service Publications
Ordering Information 13-11
Customer Satisfaction
Procedure 13-1

D

Damage Repair, Collision 13-8
Danger, Warnings, and
Cautions iv
Data Recorders, Event 13-14
Daytime Running
Lamps (DRL) 6-2
Defensive Driving 9-3
Delayed Locking 2-8
Devices
Auxiliary 7-14
Distracted Driving 9-2
Dome Lamps 6-6
Door
Ajar Messages 5-34
Delayed Locking 2-8
Locks 2-7
Power Locks 2-7
Drive Belt Routing, Engine 12-5
Driver Information
Center (DIC) 5-24
Driving
Characteristics and
Towing Tips 9-55
Defensive 9-3
Drunk 9-3

Driving (cont'd)
For Better Fuel Economy 1-19
Highway Hypnosis 9-11
Hill and Mountain Roads 9-11
If the Vehicle is Stuck 9-13
Loss of Control 9-5
Off-Road Recovery 9-5
Track Events and Competitive 9-6
Vehicle Load Limits 9-14
Wet Roads 9-10
Winter 9-12
Driving Mode Competitive 9-40

E

Electrical Equipment, Add-On 9-61
Electrical System
Engine Compartment Fuse Block 10-49
Fuses and Circuit Breakers 10-49
Instrument Panel Fuse Block 10-52
Electrical System (cont'd)
Overload 10-48
Rear Compartment Fuse Block 10-54
Emergency
OnStar® 14-3
Engine
Air Cleaner/ Filter 10-21, 10-23, 10-24
Check and Service Engine Soon Light 5-16
Compartment Overview 10-6
Coolant 10-30
Coolant Temperature Gauge 5-12
Cooling System .. 10-25, 10-27–10-29
Cooling System Messages ...5-35
Cover 10-13
Drive Belt Routing 12-5
Exhaust 9-27
Heater 9-22
Oil Life System 10-19
Oil Messages 5-35
Oil Pressure Gauge 5-10
Overheating 10-35
Engine (cont'd)
Power Messages 5-36
Pressure Light 5-22
Running While Parked 9-28
Starting 9-21
Engine Oil Temperature Gauge 5-11
Entry Lighting 6-6
Equipment, Towing 9-60
Event Data Recorders 13-14
Exit Lighting 6-6
Extender, Safety Belt 3-14
Exterior Lamp Controls 6-1
Exterior Lighting Battery Saver 6-7

F

Filter,
Engine Air Cleaner 10-21, 10-23, 10-24
Flash-to-Pass 6-2
Flashers, Hazard Warning 6-4
Flat Tire 10-79
Changing 10-89
Floor Mats 10-109

Fluid
Automatic Transmission 10-20
Brakes 10-39
Power Steering 10-36
Washer 10-37
Fog Lamps
Front 6-5
Frequency Statement
Radio 13-12
Front Fog Lamp
Light 5-23
Front Seats
Adjustment 3-3
Heated 3-6
Fuel 9-51
Additives 9-53
Economy Driving 1-19
Filling a Portable Fuel
Container 9-55
Filling the Tank 9-53
Foreign Countries 9-53
Gauge 5-9
Management, Active 9-27
Requirements, California 9-53
System Messages 5-36
Fuses
Engine Compartment
Fuse Block 10-49
Fuses and Circuit
Breakers 10-49
Instrument Panel Fuse
Block 10-52
Rear Compartment Fuse
Block 10-54

G

Garage Door Opener 5-48
Programming 5-48
Gauges
Engine Coolant
Temperature 5-12
Engine Oil Pressure 5-10
Engine Oil Temperature 5-11
Fuel 5-9
Odometer 5-9
Speedometer 5-9
Tachometer 5-9
Transmission Temperature 5-13
Gauges (cont'd)
Trip Odometer 5-9
Voltmeter 5-13
Warning Lights and
Indicators 5-6
General Information
Service and Maintenance 11-1
Towing 9-55
Vehicle Care 10-3
Glove Box 4-1
GM Mobility Reimbursement
Program 13-5

H

Halogen Bulbs 10-44
Hazard Warning Flashers 6-4
Head Restraints 3-2
Head-up Display 5-28
Headlamps
Aiming 10-44
Automatic 6-3
Bulb Replacement 10-44
Daytime Running
Lamps (DRL) 6-2
Flash-to-Pass 6-2

Headlamps (cont'd)
High Intensity Discharge (HID) Lighting 10-45
High-Beam On Light 5-23
High/Low Beam Changer 6-2
Heated Front Seats 3-6
Heated Mirrors 2-14
Heater
Engine 9-22
Heating and Air Conditioning ... 8-1
High-Beam On Light 5-23
High-Speed Operation 10-66
Highway Hypnosis 9-11
Hill and Mountain Roads 9-11
Hill Start Assist (HSA) 9-38
Hood 10-5
Horn 5-3
How to Wear Safety Belts Properly 3-9
Hydraulic Clutch 10-21

I

Ignition Positions 9-19
Ignition Transmission Lock Check 10-42
Immobilizer 2-12
Light 5-22
Infants and Young Children, Restraints 3-30
Infotainment 7-1
Infotainment System 13-15
Instrument Cluster 5-7
Interior Rearview Mirrors 2-14
Introduction iii

J

Jump Starting 10-96

K

Key and Lock Messages 5-36
Keyless Entry
Remote (RKE) System 2-3
Keys 2-1

L

Labeling, Tire Sidewall 10-59
Lamps
Daytime Running (DRL) 6-2
Dome 6-6
Exterior Controls 6-1
Exterior Lighting Battery Saver 6-7
Front Fog 6-5
Headlamps, Front Turn Signal, and Parking Lamps 10-45, 10-46
License Plate 10-47
Malfunction Indicator 5-16
Messages 5-36
Lap-Shoulder Belt 3-10
LATCH System
Replacing Parts after a Crash 3-42
LATCH, Lower Anchors and Tethers for Children 3-36
Latches, Seatback 3-5

Lighting
Entry 6-6
Exit 6-6
Illumination Control 6-5
Theater Dimming 6-6
Lights
Airbag Readiness 5-15
Antilock Brake System (ABS) Warning 5-20
Brake System Warning 5-19
Charging System 5-16
Cruise Control 5-23
Engine Oil Pressure 5-22
Flash-to-Pass 6-2
Front Fog Lamp 5-23
High-Beam On 5-23
High/Low Beam Changer 6-2
Immobilizer 5-22
Safety Belt Reminders 5-14
Taillamp Indicator 5-23
Tire Pressure 5-22
Traction Control OFF/ StabiliTrak OFF 5-21
Traction Control System (TCS)/StabiliTrak® 5-21
Traction Off 5-20
Limited-Slip Rear Axle 9-44
Locks
Automatic Door 2-8
Delayed Locking 2-8
Door 2-7
Lockout Protection 2-9
Power Door 2-7
Loss of Control 9-5
Low-Profile Tires 10-57
Lower Anchors and Tethers for Children (LATCH System) 3-36

M

Maintenance Records 11-16
Maintenance and Care Additional 11-9
Maintenance Schedule 11-2
Recommended Fluids and Lubricants 11-12
Malfunction Indicator Lamp 5-16
Manual Mode 9-31
Manual Transmission 9-34
Fluid 10-21
Messages
Airbag System 5-40
Battery Voltage and Charging 5-33
Brake System 5-33
Compass 5-33
Convertible Top 5-33
Door Ajar 5-34
Engine Cooling System 5-35
Engine Oil 5-35
Engine Power 5-36
Fuel System 5-36
Key and Lock 5-36
Lamp 5-36
Object Detection System 5-37
Ride Control System 5-37
Security 5-40
Service Vehicle 5-40
Tire 5-40
Transmission 5-41
Vehicle 5-32
Vehicle Reminder 5-41
Vehicle Speed 5-42
Window 5-42

Mirrors
Automatic Dimming 2-14
Automatic Dimming
Rearview 2-15
Convex 2-13
Heated 2-14
Manual Rearview 2-14
Power 2-14
Mirrors, Interior Rearview 2-14
Monitor System, Tire
Pressure 10-67
Multi-band Antenna 7-12

N

Navigation
OnStar® 14-3
Net, Convenience 4-5
New Vehicle Break-In 9-18

O

Object Detection System
Messages 5-37
Odometer 5-9
Trip 5-9
Off-Road
Recovery 9-5
Oil
Engine 10-15
Engine Oil Life System 10-19
Engine Oil Pressure
Gauge 5-10
Messages 5-35
Pressure Light 5-22
Older Children, Restraints 3-28
Online Owner Center 13-4
OnStar 13-15
OnStar®
System, In Brief 1-19
OnStar® Additional
Information 14-6
OnStar® Connections 14-4
OnStar® Emergency 14-3
OnStar® Navigation 14-3
OnStar® Overview 14-1
OnStar® Security 14-3
OnStar® Vehicle
Diagnostics 14-6
Operation, Infotainment
System 7-3
Ordering
Service Publications 13-11
Outlets
Power 5-5
Overheating, Engine 10-35
Overview, Infotainment
System 7-2

P

Park
Shifting Into 9-24
Shifting Out of 9-25
Parking 9-26
Brake 9-37
Brake and P (Park)
Mechanism Check 10-43
Over Things That Burn 9-26
Parking Assist 9-48
Passenger Airbag Status
Indicator 5-15
Passenger Compartment Air
Filter 8-4
Passenger Sensing System ... 3-22
Perchlorate Materials
Requirements, California 10-3
Personalization
Vehicle 5-42

Phone
Bluetooth 7-20, 7-21, 7-25
Power
Door Locks 2-7
Mirrors 2-14
Outlets 5-5
Protection, Battery 6-7
Retained Accessory (RAP) . . . 9-23
Seat Adjustment 3-4
Steering Fluid 10-36
Windows 2-15
Pregnancy, Using Safety
Belts 3-13
Privacy
Vehicle Data Recording 13-14
Program
Courtesy Transportation 13-7
Proposition 65 Warning,
California 10-3

R

Radio Frequency
Identification (RFID) 13-12
Radio Frequency
Statement 13-12
Radios
AM-FM Radio 7-7
Reception 7-10
Satellite 7-9
Rear Axle 10-41
Limited-Slip 9-44
Rear Seats 3-7
Rear Storage 4-1
Rear Vision Camera (RVC) 9-49
Rearview Mirrors 2-14
Automatic Dimming 2-15
Reclining Seatbacks 3-4
Recommended Fluids and
Lubricants 11-12
Records
Maintenance 11-16
Recreational Vehicle
Towing 10-99
Reimbursement Program,
GM Mobility 13-5
Remote Keyless Entry
(RKE) System 2-2, 2-3
Remote Vehicle Start 2-5
Replacement Bulbs 10-48
Replacement Parts
Airbags 3-28
Maintenance 11-14
Replacing Airbag System 3-28
Replacing LATCH System
Parts after a Crash 3-42
Replacing Safety Belt
System Parts after a Crash . . . 3-15
Reporting Safety Defects
Canadian Government 13-13
General Motors 13-13
U.S. Government 13-12
Restraints
Where to Put 3-35
Retained Accessory
Power (RAP) 9-23
Ride Control Systems
Limited Slip Rear Axle 9-44
Messages 5-37
Selective 9-44
Roads
Driving, Wet 9-10
Roadside Assistance
Program 13-5
Roof
Sunroof 2-17

Rotation, Tires 10-71
Routing, Engine Drive Belt 12-5
Running the Vehicle While
Parked 9-28

S

Safety Belts 3-8
Care 3-14
Extender 3-14
How to Wear Safety Belts
Properly 3-9
Lap-Shoulder Belt 3-10
Reminders 5-14
Replacing after a Crash 3-15
Use During Pregnancy 3-13
Safety Defects Reporting
Canadian Government 13-13
General Motors 13-13
U.S. Government 13-12
Safety System Check 3-14
Satellite Radio 7-9
Scheduling Appointments 13-7
Sealant Kit, Tire 10-81
Seatback Latches 3-5
Seats
Adjustment, Front 3-3
Head Restraints 3-2
Heated Front 3-6
Power Adjustment, Front 3-4
Rear 3-7
Reclining Seatbacks 3-4
Securing Child
Restraints 3-42, 3-44
Security
Messages 5-40
OnStar® 14-3
Vehicle 2-11
Vehicle Alarm 2-11
Selective Ride Control 9-44
Service
Accessories and
Modifications 10-3
Doing Your Own Work 10-4
Engine Soon Light 5-16
Maintenance Records 11-16
Maintenance, General
Information 11-1
Parts Identification Label 12-1
Service (cont'd)
Publications Ordering
Information 13-11
Scheduling Appointments 13-7
Vehicle Messages 5-40
Services
Special Application 11-8
Servicing the Airbag 3-26
Shift Lock Control Function
Check, Automatic
Transmission 10-42
Shifting
Into Park 9-24
Out of Park 9-25
Signals, Turn and
Lane-Change 6-4
Spare Tire
Compact 10-95
Special Application Services . . . 11-8
Specifications and
Capacities 12-2
Speedometer 5-9
StabiliTrak
OFF Light 5-21

Start Assist, Hills 9-38
Start Vehicle, Remote 2-5
Starter Switch Check 10-41
Starting the Engine 9-21
Steering 9-4
  Fluid, Power 10-36
  Wheel Adjustment 5-2
  Wheel Controls 5-2
Storage
  Rear 4-1
Storage Areas
  Center Console 4-2
  Convenience Net 4-5
  Glove Box 4-1
Storage Compartments 4-1
Storing the Tire Sealant
  and Compressor Kit 10-88
Stuck Vehicle 9-13
Summer Tires 10-59
Sun Visors 2-17
Sunroof 2-17
Symbols iv
System
  Infotainment 7-1, 13-15

T

Tachometer 5-9
Taillamp Indicator Light 5-23
Taillamps
  Turn Signal and
    Stoplamps 10-46
Text Telephone (TTY) Users ... 13-4
Theater Dimming 6-6
Theft-Deterrent Systems 2-12
  Immobilizer 2-12
Time 5-4
Tires 10-56
  All-Season 10-57
  Buying New Tires 10-74
  Chains 10-79
  Changing 10-89
  Compact Spare 10-95
  Competition Oriented 10-58
  Designations 10-61
  Different Size 10-75
  If a Tire Goes Flat 10-79
  Inflation Monitor System 10-68
  Inspection 10-71
  Low Profile 10-57
  Messages 5-40
  Pressure 10-66
Tires (cont'd)
  Pressure Light 5-22
  Pressure Monitor System ... 10-67
  Rotation 10-71
  Sealant and
    Compressor Kit 10-81
  Sealant and Compressor
    Kit, Storing 10-88
  Sidewall Labeling 10-59
  Terminology and
    Definitions 10-62
  Uniform Tire Quality
    Grading 10-76
  Wheel Alignment and Tire
    Balance 10-77
  Wheel Replacement 10-78
  When It Is Time for New
    Tires 10-73
  Winter 10-57
Tonneau Cover 4-3
Towing
  Driving Characteristics 9-55
  Equipment 9-60
  General Information 9-55
  Recreational Vehicle 10-99
  Trailer 9-59
  Vehicle 10-99

Track Events and
Competitive Driving 9-6
Traction 5-21
Control OFF/StabiliTrak
OFF Light 5-21
Control System (TCS)/
StabiliTrak® Light 5-21
Limited-Slip Rear Axle 9-44
Off Light 5-20
Selective Ride Control 9-44
Traction Control/Electronic
Stability Control 9-38
Trailer
Towing 9-59
Transmission
Automatic 9-28
Fluid, Automatic 10-20
Fluid, Manual 10-21
Messages 5-41
Temperature Gauge 5-13
Transportation Program,
Courtesy 13-7
Trip Odometer 5-9
Trunk 2-9
Turn and Lane-Change
Signals 6-4

U

Uniform Tire Quality
Grading 10-76
Universal Remote System 5-48
Operation 5-50
Programming 5-48
Using This Manual iii

V

Vehicle
Alarm System 2-11
Canadian Owners iii
Control 9-3
Identification
Number (VIN) 12-1
Load Limits 9-14
Messages 5-32
Personalization 5-42
Reminder Messages 5-41
Remote Start 2-5
Security 2-11
Speed Messages 5-42
Towing 10-99
Vehicle Care
Storing the Tire Sealant
and Compressor Kit 10-88
Tire Pressure 10-65
Vehicle Data Recording
and Privacy 13-14
Vehicle Diagnostics
OnStar® 14-6
Ventilation, Air 8-3
Visors 2-17
Voltmeter Gauge 5-13

W

Warning
Brake System Light 5-19
Warning Lights, Gauges, and
Indicators 5-6
Warnings iv
Cautions and Danger iv
Hazard Flashers 6-4
Washer Fluid 10-37

Wheels
Alignment and Tire
Balance 10-77
Different Size 10-75
Replacement 10-78
When It Is Time for New
Tires 10-73
Where to Put the Restraint 3-35
Windows 2-15
Messages 5-42
Power 2-15
Windshield
Replacement 10-44
Wiper/Washer 5-3
Winter
Driving 9-12
Winter Tires 10-57
Wiper Blade Replacement 10-43

✍ NOTES